Operator Algebras on Singular Manifolds. I

B.-W. Schulze, B. Sternin, and V. Shatalov

Preprint 97/15
June 1997

Universität Potsdam
Institut für Mathematik
PF 60 15 53
14415 Potsdam

Bert-Wolfgang Schulze,
Boris Sternin, and Victor Shatalov

OPERATOR ALGEBRAS
on
SINGULAR MANIFOLDS

Potsdam 1997

Professor Bert-Wolfgang Schulze
Potsdam University
E-mail:schulze@mpg-ana.uni-potsdam.de

Professors Boris Sternin and Victor Shatalov
Moscow State University
E-mail: sternin@mpg-ana.uni-potsdam.de

This text is a working version of the Introduction to the book "Operator Algebras on Singular Manifolds" by B.-W. Schulze, B. Sternin, and V. Shatalov to be published in 1998 in Akademie Verlag.

PREFACE

The book is devoted to the theory of elliptic equations on manifolds with singularities. This topic is not at all new. Beginning with the well-known paper [2] by Vladimir Kondratijev, during more than 30 years a lot of mathematicians develope this theme in different directions. These developements concern the construction of algebraic structures of corresponding operators, investigation of asymptotic properties of solutions, and, finally, the computation of the index. At present there exists large amount of works devoted to this theme, hundreds of papers are written, series of fundamental monographies are published (see, e. g., [1, 7, 6, 10, 11, 12] and the bibliography therein).

What was the reason of writing this book and what differs it from the others? To answer this question, it is nesessary to give a short review of the theory of equations on manifolds with singularities constructed up to the present time. The basis of this theory is investigation of equations on manifolds with *conical* singularities. If we consider compact manifolds with singularities (only such manifolds will be the topic of our consideration here), at present the analytic part of the theory is essentially completed. Namely, the questions of solvability (Fredholm property) in appropriate weight spaces are examined, the corresponding algebraic structures are constructed, the differential properties of solutions are investigated. The basis tool of investigation of differential equations on manifolds with conical points is the *Mellin transform*, the apparatus being astonishingly adequate to the problem considered. Actually, the Mellin transform not only allowed to regularize corresponding equations but also to define the class of Mellin pseudodifferential operators which are of the same importance as classical pseudodifferential operators on smooth manifolds. In particular, on the basis of Mellin pseudodifferential operators it occured to be possible to construct the operator calculus on manifolds with conical points and to prove the finiteness theorem in the framework of this algebra. Also, the notion of "hierarchy" of singularities allowing to include the manifolds with conical "wedges" was worked out (see, e. g. [11]).

The new stage in the elliptic theory on manifolds with singularities was investiga-

tion of differential equations on manifolds on manifolds with different (say, *cuspidal*) type of singularities[1]. During the construction of this theory it occures first that the Mellin transform being a good tool in the theory of manifolds with conical singularities occurs to be inapplicable in the situation of cusp-type singularities. Moreover (and, possibly, this is the main thing) it occurs that this new situation *essentially differs* from that of manifolds with conical points. For instance, asymptotic behavior of solutions for manifolds with cusp-type singularities have quite different nature than that for "conical case". Namely, in contrast to conormal asymptotics (see [11]) where the solutions are represented as a finite sum of terms, the asymptotic expansions on manifolds with cusps are written down in the form of infinite (divergent) series [17, 18]. The latter fact leads to the necessity of *resummation* of these divergent series, and, hence, to involve a new apparatus performing such a resummation. Such an apparatus which we call *resurgent analysis* allows (also in the wedge-situation) to examine the Stokes phenomenon, the phenomenon having no analog in the case of conical singularities. Note in this connection that the resurgent analysis method was worked out in detail by B. Sternin and V. Shatalov in [25] for the case of functions with exponential type and was modified for power asymptotic expansions in [15, 14]. It is also worth mentioning that similar situation takes place for solutions to *inhomogeneous* equations for conical type as well [16, 13] so that the resurgent analysis method gives new effects in asymptotic theory also in the situation investigated earlier.

The new apparatus (compared with the classical one) occured to be necesseary also for proof of the *finiteness theorem* for manifolds with cuspidal singularities. This proof is carried out (what is natural) in the framework of corresponding operator algebras. Here, to construct the correponding algebra we apply the ideas of the geometrical quantization. More exactly, using *Maslov's noncommutative analysis* [5, 9], we construct an algebra of function of noncommutative operators in which the composition law is determined with the help of left ordered representations of generators of this algebra and, naturally, with the help of their commutation relations. This geometrical approach together with ideas of the resurgent representation introduced in [25], [26] allowed to present a *unified scheme* of construction of operator algebras valid both for conical and cuspidal singular points [21] including the wedge situation [19]. Moreover, in the framework of this approach it is possible to construct the *deformation of resurgent representations* and the corresponding algebras, which allowed, in particular, to reduce the computation of the *index* of elliptic operators on manifolds with cusps to that of elliptic operators on a topologically equivalent

[1] The exact definition of a singularity of cuspidal type will be given in the main part of the book; see also Introduction. Note, that this notion, as well as the definition of other types of singularities is convenient to formulate in terms of structure rings of singular points (see [20])

manifold with singularities of the cone type [21].

Let us tell a few words about the last works of the authors which concernes the topic of the book but are not inclided in it.

These are, first of all, nonstationary problems for equations on manifolds with singularities. Here the authors have obtained the results concerning oscillations of conical shells [22], and investigated general nonstationary problems for equations of Fuchs-Borel type [23].

Also, some topological aspects of the theory are investigated. Namely, the index formula is obtained for wide class of elliptic operators on manifolds with singularities of conical (and, hence, cuspidal) type. The formula of Atiyah-Bott-Lefschetz type for elliptic complexes on manifolds with cone-like singularities. These questions the authors plan to discuss in another monography.

Contents

Introduction

Examples and motivations

The aim of this introduction is to ackquaint the reader with main notions of the theory of (pseudo)differential equations on manifolds with singularities on simple examples. The main topics illustrated here is the *resurgent analysis*, that is, the exact version of the semi-classical approximation, and the notion of operator algebras.

Besides, we illustrate that there exists a lot of types of singular points of the underlying manifold for which the theory goes more or less similar. This shows the nesessity of working out a *general scheme* such that all particular types of singularities are its specializations.

0.1 What manifolds with singularities are?

The book is devoted to the investigation of differential equations on manifolds with singularities. Clearly, to begin this investigation, one has to understand what is meant by the term *manifold with singularities*. In this introduction we shall consider now only point-type singularities, that is, we suppose that the manifold M under consideration contains at most a discrete set of singular points $\alpha_1, \ldots, \alpha_N$. We suppose also that in a neighborhood of each singular point α_j the considered manifold is *topologically* equivalent to a cone

$$K = \{[0,1] \times \Omega\} \,/\, \{\{0\} \times \Omega\} \tag{0.1}$$

with a smooth base Ω.

However, singular points of such type, being topologically equivalent, can have a *variety of differential structures*. For example, one can consider singular points of conical type (the suitable model of this case is a circular cone in the three-dimensional Cartesian space), or cuspidal type (for instance, such type of singularity

has the surface in $\mathbf{R}^3$ obtained by rotation of a parabola $x = z^{k+1}$ for some $k > 0$ around the Oz axis). In both these cases the topological structure of the manifold is described by relation (0.1), and the question is how to describe the difference between these cases.

Of course, for the description of this difference one can use the embedding of the considered manifold (or a neighborhood of its singular point) into some Cartesian space. However, it is desirable to present the interior description of singularity types in terms of the manifold itself. Certainly, the most general description of a manifold (smooth or with singularities) is a description with the help of the *structure sheaf* of this manifold. All information about the manifold in question, including the form of differential operators, can be expressed in terms of the structure sheaf. It occurs that on manifolds with singularities one has to use a ring of differential operators rather than the ring of functions in order to describe singularity types.

From the interior viewpoint, the only difference between conical and cuspidal singularities lies in the form of the differential operator in question. So, the operators with *conical degeneracy* are of the form

$$\hat{H} = r^{-m} H\left(r, \omega, -ir\frac{\partial}{\partial r}, -i\frac{\partial}{\partial \omega}\right), \tag{0.2}$$

near the considered singular point of the manifold M, where (r, ω) are coordinates on K corresponding to representation (0.1) and m is an order of the operator $\hat{H}$; in this case such a point is referred as a point of *conical singularity*. On the contrary, the operators of *cuspidal degeneracy* of order k are given by

$$\hat{H} = r^{-m(k+1)} H\left(r, \omega, -ir^{k+1}\frac{\partial}{\partial r}, -i\frac{\partial}{\partial \omega}\right) \tag{0.3}$$

with some integer $k > 0$; here we refer this point as a singular point of *cuspidal type of order k*.

Below, we shall explain why formulas (0.2) and (0.3) naturally describe the two mentioned types of singularities. Clearly, there exist a lot of other singularity types; the consideration of these types is postponed to the main part of the book.

Note that if one considers a *Riemannian* manifold, then the type of singularity can be characterized by the type of degeneration of the considered Riemannian metrics in a neighborhood of a singular point of this manifold. However, the Riemannian structure is, clearly, an additional structure, and cannot be used as a basis of the description of singularities. This concerns also to the theory of differential equations. The Riemannian structure takes part only in the description of concrete differential operators connected with geometry of Riemannian manifolds such that the Beltrami-Laplace operator.

Since we are intended to consider compact manifolds smooth everywhere except for some discrete set of singular points, a ring of germs of the structure ring at some (arbitrary) singular point is of main interest for us. In what follows, this ring will be referred as a *structure ring* of the singular point in question or even simply as structure ring if the point is clear from the context.

Evidently, the structure ring determines all the analysis in a neighborhood of the given point: the class of Riemannian metrices, the ring of differential equations, etc. In particular, the different choice of structure rings leads to different classes of differential equations. Namely, for different structure rings we shall arrive at equations with "conical degeneracy", "cuspidal degeneracy", and a lot of other types of degeneracy which up to now have not been considered in the theory of differential equations.

And the last remark. As we have already mentioned, here we consider only isolated singularities. This is connected with the fact that the consideration of isolated singularities is crucial for constructing a general manifold with singularities of nonisolated type. The latter can be obtained from the formers with the help of product operation, as it will be explained below.

To motivate the approach to the description of singular points of the manifolds with singularities, we consider two examples.

0.1.1 Circular cone

Let us consider a circular cone K with the vertex in the origin and opening θ embedded in the three-dimensional Carthesian space $\mathbf{R}^3$ (see Figure 0.1.) It seems to be natural to consider the restriction of the local structure ring $[C^\infty(\mathbf{R}^3)]_0$ as a structure ring $[C^\infty(K)]_0$ of the cone K at its vertex. So, the elements of $[C^\infty(K)]_0$ will be germs of functions in the coordinates (r, φ) having the form

$$F(r\sin\theta\cos\varphi, r\sin\theta\sin\varphi, r\cos\theta)$$

for different smooth functions $F(x, y, z)$ in a neighborhood of the origin in $\mathbf{R}^3$.

However, there exists much better description of the above introduced local ring. To obtain this description, let us consider the Riemannian metrics

$$ds^2 = dr^2 + r^2\sin^2\theta d\varphi^2 \tag{0.4}$$

on K induced by the standard Riemannian metrics of the space $\mathbf{R}^3$. One can see that this metrics is degenerated at the point $r = 0$. To resolve this degeneration, one can perform the variable change

$$r = e^{-t}, \tag{0.5}$$

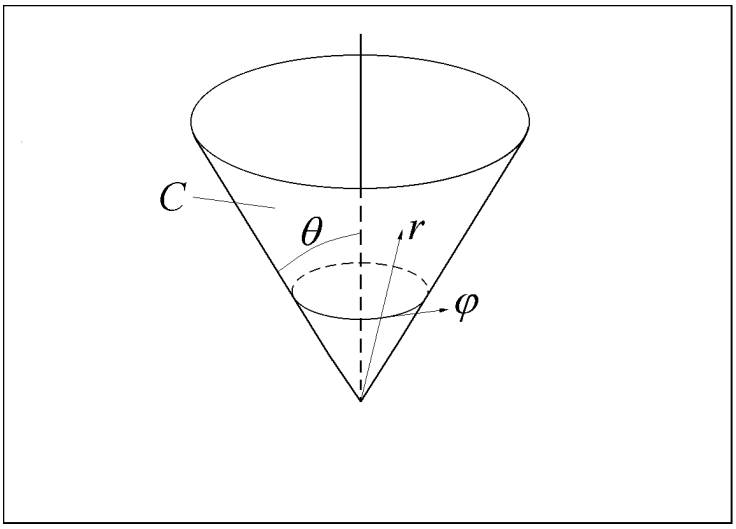

Figure 0.1. Cone and its coordinates.

transforming metrics (0.4) to the form

$$ds^2 = e^{-2t}\left(dt^2 + \sin^2\theta d\varphi^2\right),$$

which becomes to be nondegenerated after dividing by an inessentail factor e^{-2t}. So, the more convenient representation of the cone K is not a representation of the form (0.1), but the representation of K as a one-point compactification of the *infinite cylinder*

$$K = [0, +\infty] \times S^1 \tag{0.6}$$

with the coordinates (t, φ) on it. For such representation, the elements of the local structure ring have the form

$$F\left(e^{-t}\sin\theta\cos\varphi, e^{-t}\sin\theta\sin\varphi, e^{-t}\cos\theta\right),\ F \in \left[C^\infty\left(\mathbf{R}^3\right)\right]_0$$

of smooth functions on the infinite cylinder given by (0.6) having *exponential stabilization* at infinity.

We remark also that such representation of the local ring gives an opportunity to define naturally the class of *differential operators* to be considered on the cone K. Namely, they must be obtained by the variable change (0.5) from differential operators of the canonical form

$$\hat{H} = H\left(e^{-t}, \varphi, -i\frac{\partial}{\partial t}, \frac{\partial}{\partial\varphi}\right)$$

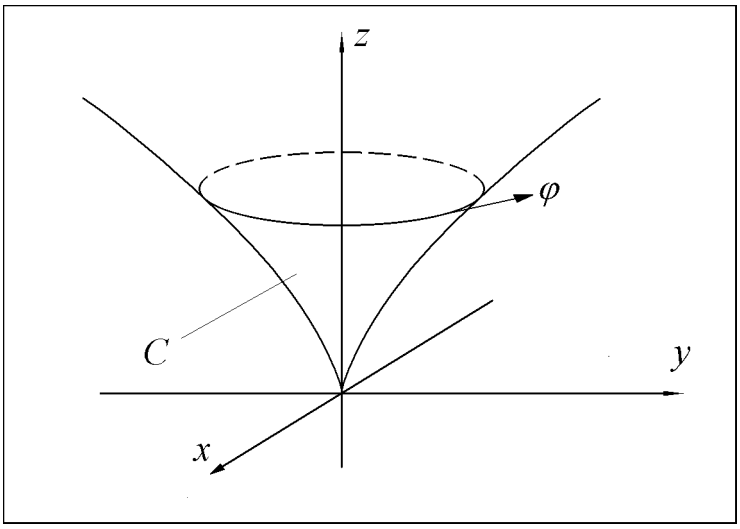

Figure 0.2. Cuspidal point.

with coeficients *stabilizing with exponential speed* (that is, belonginig to the above defined local ring). This leads us to a class of differential operators of the form

$$\hat{H} = H\left(r, \varphi, -ir\frac{\partial}{\partial r}, \frac{\partial}{\partial \varphi}\right)$$

exactly coinciding with operators (0.2) with conical degeneracy.

0.1.2 Circular cusp

Let us consider the circular cusp C_0 obtained by rotation of the parabola

$$x = z^{k+1}$$

of order k around the axis Oz (see Figure 0.2). Then elements of the restriction of the ring $[C^\infty(\mathbf{R}^3)]_0$ to C_0 have the form

$$F\left(z^{k+1}\cos\varphi, z^{k+1}\sin\varphi, z\right).$$

The corresponding Riemannian metrics is

$$ds^2 = \left(1 + (k+1)^2 z^{2k}\right) dz^2 + z^{2k+2} d\varphi^2. \tag{0.7}$$

The variable change eliminating the degeneracy of the metrics (0.7) is

$$t = \frac{1}{kz^k}, \; z = \frac{1}{k^{1/k}t^{1/k}}. \tag{0.8}$$

The latter variable change transforms the metrics (0.8) to the form

$$ds^2 = \left(\frac{1}{kt}\right)^{2(1+1/k)} \left[\left(1 + \frac{(k+1)^2}{k^2t^2}\right) dt^2 + d\varphi^2\right]$$

which is evidently nondegenerated in a neighborhood of $t = \infty$ after omitting the inessential conformal factor $(kt)^{-2(1+1/k)}$.

Now the local ring $[C^\infty(C_0)]_0$ can be described as a ring of functions

$$F\left(t^{-1/k}, \varphi\right), \; F \in C^\infty$$

with *power stabilization at infinity* (with the speed $t^{-1/k}$.)

This description of the local ring leads us again to the description of differential operators which are naturally defined on the manifold near the cusp point. Namely, these must be the images of the operators

$$\hat{H} = H\left(\frac{1}{t^{1/k}}, \varphi, -i\frac{\partial}{\partial t}, -i\frac{\partial}{\partial \varphi}\right)$$

under the action of variable change (0.8). These operators have the form

$$\hat{H} = H\left(k^{1/k}z, \varphi, -iz^{k+1}\frac{\partial}{\partial z}, -i\frac{\partial}{\partial \varphi}\right), \tag{0.9}$$

which again coincide with (0.3). We emphasize that this class of operators is suitable only for integer values of k since in the opposite case the set of operators of the form (0.9) does not form an algebra. So, for noninteger k one have to consider a closure of this set of operators with respect to composition as the corresponding local ring. This case shall be considered in detail in the main part of the book.

0.1.3 Conclusions

The considered examples show that:

- The convenient *topological model* of the isolated singular point of a manifold is a one-point compactification

$$M_{\text{loc}} = C \cup \{\infty\}$$

of a infinite half-cylinder

$$C = \overline{\mathbf{R}_+} \times \Omega. \tag{0.10}$$

Topological models (0.10) and (0.1) are homeomorphic to each other since a segment $[0,1]$ is homeomorphic to the compactificated half-axis $\mathbf{R}_+ \cup \{\infty\}$ with 0 corresponding to ∞, but the description of local rings looks more clear on the model M_{loc}.

- The *local rings determining a type* of an isolated singular point of M are described with the help of the speed of stabilization of functions given on the local model M_{loc} as $t \to \infty$. More exactly, if $\varphi(t)$ is a smooth function on $\mathbf{R}_+$ such that

  $$\lim_{t \to 0} \varphi(t) = 0,$$

  (in what follows we refer $\varphi(t)$ as a *weight function*) then the appropriate candidate for the role of a local ring describing the type of the singular point under consideration is a set of functions

  $$u(t,\omega) = F(\varphi(t), \omega), \; F(r,\omega) \in C^\infty([0,1] \times \Omega). \tag{0.11}$$

  Here by ω we denote local coordinates on the manifold Ω. Clearly, the set of functions of the type (0.11) have to be modified up to a ring of functions closed with respect to differentiation so that this modified ring could serve as a local ring for the manifold M at the singular point in question.

- The ring of local differential operators on the manifold M_{loc} must be defined now as a *ring of operators* of the form

  $$\sum_{j=0}^{m} \sum_{|\alpha| \leq m-l} a_{j\alpha}(t,\omega) \left(-i\frac{\partial}{\partial t}\right)^j \left(-i\frac{\partial}{\partial \omega}\right)^\alpha \tag{0.12}$$

  with coefficients from the local structure ring at the singular point. One more reason for the requirement that the local ring must be closed under the differentiation is that this requirement guarantees that the set of operators (0.12) form a ring (algebra.)

In the following section we construct some *scale of local rings* on M_{loc} describing a scale of types of isolated singularities of the manifold M. Clearly, the scale presented below does not pretend to be a complete classification of types of singular points of a manifold M with singularities. For example, one can consider singular points for which the speed of stabilization depends on the point ω of the base Ω. Besides it

seems to be impossible to write down all weight functions $\varphi(t)$ of the above described type, so we restrict ourselves by consideration of the most interesting cases which appear in applications.

Further, as it was already mentioned, we consider here only isolated singularities of the underlying manifold M. More complicated singularities can be obtained by iterations with the help of direct product operations. For example, we can consider a wedge of the type $\varphi(t)$ as a direct product of the model manifold $(M_{\text{loc}}, \varphi(t))$ with a smooth manifold X or a corner of the type $(\varphi(t), \psi(t))$ as a product of $(M_{\text{loc}}, \varphi(t))$ by some manifold N having isolated singularities of the type $(M_{\text{loc}}, \psi(t))$.

0.2 Semi-classical approximation

0.2.1 Conical case

1. Solutions to a homogeneous equation. WKB-elements of power type. Let C be a two-dimensional cone (see Figure 0.1) with a standard Riemannian metric induced by the embedding of this cone to the three-dimensional Cartesian space. Denote by (r, φ) the polar coordinates on this cone, and let

$$\Delta = \frac{1}{r}\frac{\partial}{\partial r}\left(r\frac{\partial}{\partial r}\right) + \frac{c^2}{r^2}\frac{\partial^2}{\partial \varphi^2} = \frac{1}{r^2}\left[\left(r\frac{\partial}{\partial r}\right)^2 + c^2\frac{\partial^2}{\partial \varphi^2}\right] \tag{0.13}$$

be the corresponding Beltrami-Laplace operator. Here c is a positive parameter depending on the angle θ at the vertex of the cone (see Figure 0.1; more precisely, $c = 1/\sin^2\theta$). We shall investigate the *asymptotic behavior* of solutions to the corresponding equation as $r \to 0$, that is, near the vertex of the cone.

Let us try first to compute solutions to the homogeneous equation

$$\Delta u = 0, \text{ or } \left[\left(r\frac{\partial}{\partial r}\right)^2 + c^2\frac{\partial^2}{\partial \varphi^2}\right] u = 0. \tag{0.14}$$

of the form

$$u(r, \varphi) = r^{-S(\varphi)} a(\varphi), \tag{0.15}$$

where $S(\varphi)$ (the *action*) and $a(\varphi)$ (the *amplitude function*) are some smooth 2π-periodic functions of the variable φ. (Here we restrict ourselves by computation of the principal term of the asymptotic expansion. The form of the full asymptotic

expansion will be discussed later.) Computation of the derivatives of the function $u(r,\varphi)$ with respect to the variables r and φ gives

$$\begin{aligned} r\frac{\partial u}{\partial r} &= -S(\varphi)\, r^{-S(\varphi)} a(\varphi)\,, \\ \frac{\partial u}{\partial \varphi} &= S'(\varphi)\, r^{S(\varphi)} \ln\frac{1}{r}\, a(\varphi) + r^{-S(\varphi)} a'(\varphi)\,. \end{aligned} \tag{0.16}$$

The two latter formulas show that:

- the *large parameter* of the asymptotic expansion of a solution to homogeneous equation (0.14) is exactly the quantity

$$\lambda = \ln(1/r)\,;$$

- the derivatives $r\partial/\partial r$ and $\partial/\partial\varphi$ involved in the expression of Laplace operator (0.13) are of *different* order as $r \to 0$ with respect to this parameter. Actually, the right-hand part of the second expression in (0.16) contains the large parameter $\ln(1/r)$, whereas the right hand part of the first expression does not.

Remark 1 The fact that the quantity $\lambda = \ln(1/r)$ plays a role of a large parameter for the expansion (0.15) is not an astonishing one. Actually, if one rewrites (0.15) in the form

$$u(r,\varphi) = \exp\{\lambda S(\varphi)\}\, a(\varphi)\,,$$

it will be evident that this expression is quite similar to the usual expression for a WKB-element

$$\psi(x,h) = \exp\left\{\frac{i}{h} S(x)\right\} a(x)$$

used in the quantum mechanics, see, e. g. [3]. Comparing these two formulas one can notice that the quantity $\ln(1/r)$ plays the same role in the first of these two expressions as $1/h$ does in the second one. This is the reason why the function $u(r,\varphi)$ given by (0.15) will be called in the sequel a (short) *WKB-element (of power type).* We note also that the full WKB-element in quantum mechanics has the form

$$\psi(x,h) = \exp\left\{\frac{i}{h} S(x)\right\} \left[a_0(x) - iha_1(x) - h^2 a_2(x) + \ldots\right].$$

This give rise to the guess that in the theory of asymptotic expansions of power type it is also necessary to consider *full WKB-elements,* given by

$$u(r,\varphi) = \exp\{\lambda S(\varphi)\} \left[a_0(\varphi) + \lambda^{-1} a_1(\varphi) + \lambda^{-2} a_2(\varphi) + \ldots\right].$$

As we shall see below, such elements arise in this theory in a natural way.

Substituting function (0.15) into equation (0.14) one arrives at the following relation:

$$\left\{ \left[c^2 \left(S'(\varphi)^2\right) a(\varphi)\right] \lambda^2 + \left[2S'(\varphi)\, a'(\varphi) + S''(\varphi)\, a(\varphi)\right] \lambda \right.$$
$$\left. + \left[c^2 a''(\varphi) + (S(\varphi))^2\, a(\varphi)\right] \right\} r^{-S(\varphi)} = 0.$$

Separating the powers of λ, we obtain

1) The *Hamilton-Jacobi* equation

$$[S'(\varphi)]^2 = 0.$$

2) The *first transport* equation

$$2S'(\varphi)\, a'(\varphi) + S''(\varphi)\, a(\varphi) = 0.$$

3) The *second transport* equation

$$c^2 a''(\varphi) + [S(\varphi)]^2\, a(\varphi) = 0.$$

Let us consider solutions of all the three equations.

Clearly, all solutions of the Hamilton-Jacobi equation are constants:

$$S(\varphi) = \text{const}.$$

However, the form of this equation shows also that the characteristics corresponding to the considered problem are *multiple* ones (since the derivative $S'(\varphi)$ is involved into the Hamilton-Jacobi equation in the second power). This is the reason for the fact that the *first transport equation vanishes identically* on solutions of the Hamilton-Jacobi equation. So, the only thing rest is to solve the second transport equation. Denoting by S the (constant) value of the action, we can write down the general solution for the second transport equation in the form

$$a(\varphi) = C_1 \exp\left\{ i\frac{S}{c}\varphi \right\} + C_2 \exp\left\{ -i\frac{S}{c}\varphi \right\}$$

with arbitrary constants C_1 and C_2. Since any solution to the equation in question must be 2π-periodic in φ, we obtain the following *"quantization condition"* for values of action:

$$\frac{S}{c} = k \in \mathbf{Z},$$

so that finally all solutions to equation (0.14) of the form (0.15) are given by

$$u_k(r,\varphi) = r^{-kc}\left(C_{1k}e^{ik\varphi} + C_{2k}e^{-ik\varphi}\right),\ k \in \mathbf{Z}.$$

The fact that all the obtained solutions are exact (not asymptotic) ones is, clearly, quite occasional. However, it is known (see [2], [11]) that in the general case of equations on manifolds with conical points the asymptotics of solutions to the corresponding homogeneous equations are represented as sums of expressions of the form

$$r^{-S}\sum_{j=0}^{m} a_j(\omega)\ln^j\frac{1}{r}$$

of the *conormal expansions*, where r is the "radial" variable and ω are "angular" variables of the corresponding cone.

2. Solutions to an inhomogeneous equation. It seems quite natural to find out whether the space of WKB-elements is closed under the solutions of differential equations on manifolds with singularities. In other words, does the solution to the inhomogeneous equation

$$\left[\left(r\frac{\partial}{\partial r}\right)^2 + c^2\frac{\partial^2}{\partial\varphi^2}\right]u(r,\varphi) = f(r,\varphi) \tag{0.17}$$

have the form of a WKB-element provided that its right-hand part $f(r,\varphi)$ does? To do this, we shall find a solution to the equation (0.15) with

$$f(r,\varphi) = r^{-S(\varphi)}a(\varphi). \tag{0.18}$$

To separate the large parameter of asymptotic expansions in question, it is convenient to use $\lambda = \ln(1/r)$ as the variable. Then equations (0.17), (0.18) will be rewritten in the form

$$\left[\left(\frac{\partial}{\partial\lambda}\right)^2 + c^2\frac{\partial^2}{\partial\varphi^2}\right]u(\lambda,\varphi) = f(\lambda,\varphi), \tag{0.19}$$

where

$$f(\lambda,\varphi) = e^{\lambda S(\varphi)}a(\varphi).$$

Let us search for a solution to equation (0.19) in the form of a WKB-expansion

$$u(\lambda,\varphi) = e^{\lambda S(\varphi)}\left[u_0(\varphi) + \lambda^{-1}u_1(\varphi) + \lambda^{-2}u_2(\varphi) + \ldots\right]. \tag{0.20}$$

Substituting (0.20) into equation (0.19), we obtain the relation

$$\begin{aligned}
&S^2\left[u_0+\lambda^{-1}u_1+\lambda^{-2}u_2+\ldots\right]+2S\left[-\lambda^{-2}u_1-2\lambda^{-3}u_2+\ldots\right]\\
&+\left[2\lambda^{-3}u_1+6\lambda^{-4}u_2+\ldots\right]+c^2\lambda^2\left(S'\right)^2\left[u_0+\lambda^{-1}u_1+\lambda^{-2}u_2+\ldots\right]\\
&+c^2\lambda S''\left[u_0+\lambda^{-1}u_1+\lambda^{-2}u_2+\ldots\right]+2c^2\lambda S'\left[\frac{\partial u_0}{\partial\varphi}+\lambda^{-1}\frac{\partial u_1}{\partial\varphi}+\lambda^{-2}\frac{\partial u_2}{\partial\varphi}+\ldots\right]\\
&+c^2\left[\frac{\partial^2 u_0}{\partial\varphi^2}+\lambda^{-1}\frac{\partial^2 u_1}{\partial\varphi^2}+\lambda^{-2}\frac{\partial^2 u_2}{\partial\varphi^2}+\ldots\right]-a=0,
\end{aligned}$$

where S, u_j, $j=1,2,\ldots$, and a are functions of the variable φ, and the prime denotes the derivative with respect to this variable.

Now, equating to zero the coefficients of powers of λ, one obtains that $u_0=u_1=0$, and the functions $u_2,u_3,\ldots$ satisfy the following recurrent relations:

$$\begin{aligned}
&c^2\left(S'\right)^2u_2=a,\\
&c^2\left(S'\right)^2u_{k+2}=-\left(2c^2\frac{\partial u_{k+1}}{\partial\varphi}+c^2S''u_{k+1}\right)-\left(c^2\frac{\partial^2 u_k}{\partial\varphi^2}+S^2u_k\right)\\
&+2S\left(k-1\right)u_{k-1}+\left(k-1\right)\left(k-2\right)u_{k-2},\ k\geq 1,
\end{aligned}$$

where we have put $u_j=0$ for $j\leq 1$. From the latter system it is clear that the coefficients u_j, $j=0,1,\ldots$ of the asymptotic expansion (0.20) can be computed as regular functions only at point where $S'(\varphi)\neq 0$. In the opposite case, these coefficients will have singularities for those values of φ for which $S'(\varphi)=0$. This is natural since the solution of the Hamilton-Jacobi equation for the corresponding homogeneous equation is exactly $S'(\varphi)=0$ so that the zeroes of the derivative $S'(\varphi)$ are none more than resonance points for solutions of nonhomogeneous equation (0.19). Since there exists no function $S(\varphi)$ on the circle such that $S'(\varphi)\neq 0$ for any value of φ, we have to investigate the resonance case as well.

As we shall see below, the presence of the resonances originates some *additional terms* in the asymptotic expansion of solutions to the inhomogeneous equation. To obtain this fact we shall construct a solution to (0.19) with the help of the Laplace transform with respect to the variable λ:

$$\tilde{U}(z)=\int_0^\infty e^{\lambda z}u(\lambda)\,d\lambda,$$

or, what is the same, with the help of the Mellin transform in r:

$$\tilde{U}(z)=\mathcal{M}\left[u(r)\right]=\int_0^\infty r^{-z}u(r)\,\frac{dr}{r}.$$

To exclude the divergence of integrals at infinity (which are not of importance for the asymptotic behavior of functions as $r \to 0$) we shall multiply the right-hand part of equation (0.17) by some cut-off function $\chi(r) \in C^{\infty}(\mathbf{R}_{+})$ which vanishes identically for sufficiently large values of r and equals to 1 near the origin. We shall not investigate the corresponding function spaces in the explicit form; the reader can do this by herself or himself.

Applying the Mellin transform to the both sides of (0.17) and using the well-known fact that the operator $r\partial/\partial r$ is transformed into the multiplication by z, we arrive at the following equation for the Melin image $\tilde{U}(z,\varphi)$ of the function $u(r,\varphi)$:

$$\left[c^2\frac{\partial^2}{\partial\varphi^2}+z^2\right]\tilde{U}(z,\varphi)=\tilde{F}(z,\varphi),$$

where $\tilde{F}(z,\varphi)$ is a Mellin transform of the right-hand part of equation (0.17). Due to formula (0.18), this function equals

$$\tilde{F}(z,\varphi)=\frac{a(\varphi)}{z-S(\varphi)}$$

up to a holomorphic term[2]. So, we arrive at the following equation

$$\left[c^2\frac{\partial^2}{\partial\varphi^2}+z^2\right]\tilde{U}(z,\varphi)=\frac{a(\varphi)}{z-S(\varphi)} \tag{0.21}$$

for $\tilde{U}(z,\varphi)$. The solution to this equation can be written down in terms of the Green function as

$$\tilde{U}(z,\varphi)=\frac{1}{2\sin\frac{\pi z}{c}}\int\limits_{\varphi}^{\varphi+2\pi}\frac{\cos\frac{z}{c}(\varphi-\theta-\pi)\,a(\theta)\,d\theta}{z-S(\theta)}, \tag{0.22}$$

and the solution to the initial equation (0.17) can be expressed as the inverse Mellin transform of function (0.22):

$$u(r,\varphi)=\mathcal{M}_{\gamma}^{-1}\left[\tilde{U}(z,\varphi)\right]=\frac{1}{2\pi i}\int\limits_{\gamma-i\infty}^{\gamma+i\infty}r^{z}\tilde{U}(z,\varphi)\,dz, \tag{0.23}$$

where γ is some real number.

[2] As we shall see below, only the singularities of the function $\tilde{U}(z,\varphi)$ contribute to the asymptotic expansion of $u(r,\varphi)$ as $r\to 0$.

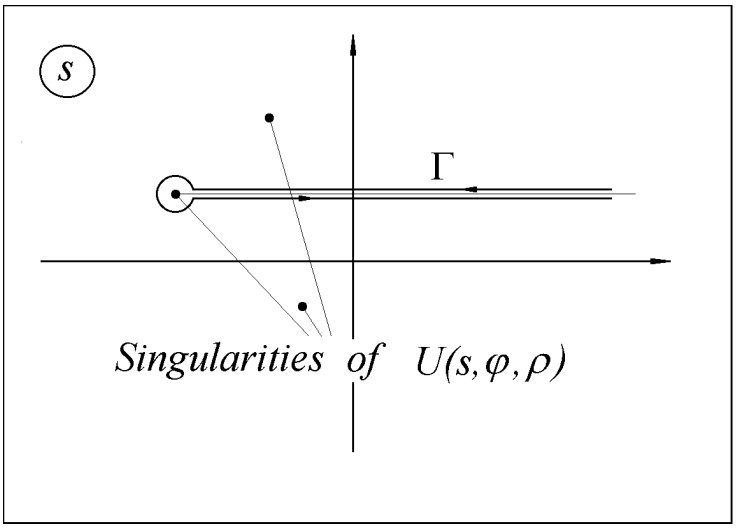

Figure 0.3. Standard contour.

Let us turn back to the problem of computation of the asymptotic expansion of the solution to the initial equation (0.17). To investigate the required asymptotic expansion, one has to understand what information on the solution $\tilde{U}(z,\varphi)$ to equation (0.21) corresponds to the information on the asymptotics of the solution $u(r,\varphi)$ to equation (0.17). It occurs that asymptotic expansion of the function $u(r,\varphi)$ as $r \to 0$ is in one-to-one correspondence with the behavior of the corresponding function $\tilde{U}(z,\varphi)$ near its points of singularity. To clarify this correspondence, let us deform the contour in representation (0.23) to the sum of contours of the special kind:

$$u(r,\varphi) = \frac{1}{2\pi i} \sum_j \int_{\Gamma_j} r^z \tilde{U}(z,\varphi)\, dz. \tag{0.24}$$

Namely, we shall use contours, coming from the infinity to some point of singularity of the integrand $\tilde{U}(z,\varphi)$ along the direction of the negative real axis, then encircling this point of singularity counterclockwise, and then coming back to infinity along the direction of the positive real axis (see Figure 0.3, clearly, we consider now functions $\tilde{U}(z,\varphi)$ with at most discrete set of singularities). The set of points of singularity encircled with at least one of the integration contours will be called a *support* of the corresponding function $u(r,\varphi)$.

The following assertion is valid:

Proposition 1 *If $z = S(\varphi)$ is a point of singularity of the function $\tilde{U}(z,\varphi)$ such that*

$$\tilde{U}(z,\varphi) = \frac{a_0(\varphi)}{z - S(\varphi)} + \ln(z - S(\varphi)) \sum_{j=0}^{\infty} \frac{(z - S(\varphi))^j}{j!} a_{j+1}(\varphi) \tag{0.25}$$

near this point (the series on the right are supposed to be convergent near the point $z = S(\varphi)$), then the function (0.24) (with only one term on the right) has the following asymptotic expansion as $r \to 0$:

$$u(r,\varphi) \simeq r^{-S(\varphi)} \sum_{j=0}^{\infty} a_j(\varphi) \ln^{-j} r. \tag{0.26}$$

The proof of this assertion will be given below in the more general case. Now we remark only that a function with singularities of the type (0.25) is called a *function with simple singularities.*

Remark 2 One can (and, as we shall see below, have to) consider another types of singularity of the function $\tilde{U}(z,\varphi)$ and obtain another asymptotic behavior of the corresponding function $u(r,\varphi)$ as $r \to 0$. For example, if $\tilde{U}(z,\varphi)$ has the singularity of the form

$$\tilde{U}(z,\varphi) = \sum_{j=0}^{\infty} \frac{(z - S(\varphi))^{j+\sigma}}{\Gamma(j+\sigma+1)} a_{j+1}(\varphi)$$

for some fixed number σ, then the corresponding function $u(r,\varphi)$ has the following asymptotic expansion

$$u(r,\varphi) \simeq r^{-S(\varphi)} \sum_{j=0}^{\infty} a_j(\varphi) \ln^{-j-\sigma} r$$

as $r \to 0$.

So, to investigate the asymptotic behavior of the solution $u(r,\varphi)$ as $r \to 0$ by means of the representation (0.24), one has to investigate the singularities of the function $\tilde{U}(z,\varphi)$ used in this representation. What is more, one can make use of the above proposition only if the function $\tilde{U}(z,\varphi)$ has the discrete set of singularities. We shall show that, for the function $\tilde{U}(z,\varphi)$ given by (0.22) this assertion is valid provided that the functions $S(\varphi)$ and $a(\varphi)$ are entire (or, at least, analytic with discrete set of singularities) functions in the variable φ.

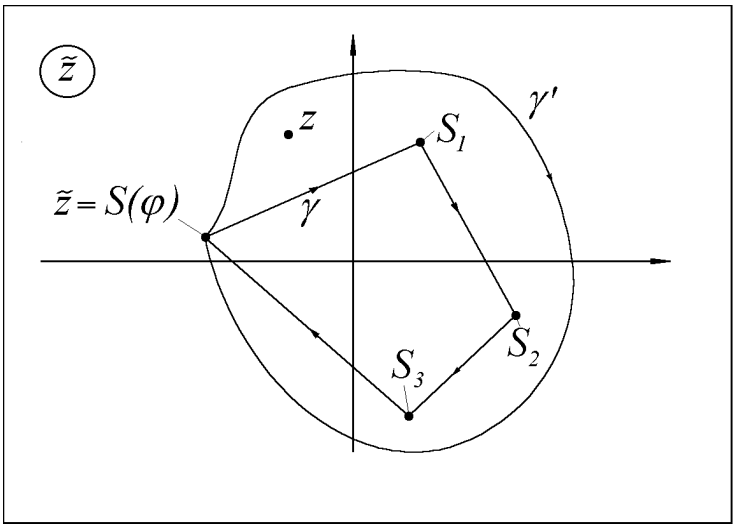

Figure 0.4. Changing integration contour.

To do this, we perform the variable change

$$\zeta = S(\theta) \tag{0.27}$$

in integral (0.22). This variable change is invertible at all points θ except for stationary points of the function $S(\theta)$. Therefore, (0.27) determines the inverse function

$$\theta = S^{-1}(\zeta) \tag{0.28}$$

which has singularities at stationary values S_j, $j = 1, 2, \ldots$ of the function $S(\varphi)$ (and, possibly, at some other points in the complex plane $\mathbf{C}_s$ arising due to the singularity of the function $S(\varphi)$ at infinity). Using variable change (0.27), we represent the function $\tilde{U}(z, \varphi)$ in the form of the Cauchy type integral

$$\tilde{U}(z, \varphi) = \frac{1}{2\sin\frac{\pi z}{c}} \int\limits_{\gamma} \frac{\cos\frac{z}{c}\left(\varphi - S^{-1}(\zeta) - \pi\right) a\left(S^{-1}(\zeta)\right) d\zeta}{S'\left(S^{-1}(\zeta)\right)(z - \zeta)}, \tag{0.29}$$

where γ is a contour in the complex plane $\mathbf{C}_\zeta$ with the origin and the endpoint at $S(\varphi)$. (This contour is not a closed one, since its origin and endpoint lye on different sheets of the Riemannian surface of the integrand. The contour γ and the singularity set of the integrand are shown on Figure 0.4.)

Now it is evident that the singularities of the function $\tilde{U}(z,\varphi)$ (except for poles at points $z = ck,\ k \in \mathbf{Z}$) coincide either with the point $S(\varphi)$ or with points of singularity of the inverse substitution (0.28). Let us suppose, for simplicity, that all singularities of (0.28) coincide with stationary values $S_j,\ j = 1,2,\ldots$ of the function $S(\varphi)$ and that all stationary points of this function are non-degenerated ones. Then the following affirmation is valid:

Proposition 2 *The solution $\tilde{U}(z,\varphi)$ to (0.21) has poles at points $z = ck,\ k \in \mathbf{Z}$ as well as ramification points $z = S(\varphi)$ and $z = S_j,\ j = 1,2,\ldots$. The asymptotic expansion of $\tilde{U}(z,\varphi)$ near the point $z = S(\varphi)$ reads*

$$\tilde{U}(z,\varphi) = \ln(z - S(\varphi)) \sum_{j=0}^{\infty} \frac{(z - S(\varphi))^j}{j!} a_{j+1}(\varphi) \tag{0.30}$$

with some analytic coefficients $a_j(\varphi)$, whereas the asymptotic expansion near stationary points $z = S_j,\ j = 1,2,\ldots$ of the phase function $S(\varphi)$ is

$$\tilde{U}(z,\varphi) = \sum_{k=0}^{\infty} \frac{(z - S_j)^{k-\frac{1}{2}}}{\Gamma\left(k + \frac{1}{2}\right)} a_{k+1}^{(j)}(\varphi). \tag{0.31}$$

The proof of relation (0.30) goes with the help of integration by parts in the integral (0.24). To prove the relation (0.31) it is sufficient to change the integration contour γ in (0.29) to the contour γ' (see Figure 0.4) with the help of the residue theorem:

$$\begin{aligned}\tilde{U}(z,\varphi) \quad = \quad & \frac{1}{2\sin\frac{\pi z}{c}} \int_{\gamma'} \frac{\cos\frac{z}{c}\left(\varphi - S^{-1}(\zeta) - \pi\right) a\left(S^{-1}(\zeta)\right) d\zeta}{S'\left(S^{-1}(\zeta)\right)(z - \zeta)} \\ & - \frac{\pi i}{\sin\frac{\pi z}{c}} \frac{\cos\frac{z}{c}\left(\varphi - S^{-1}(z) - \pi\right) a\left(S^{-1}(z)\right)}{S'\left(S^{-1}(z)\right)}.\end{aligned}$$

Clearly, the integral on the right in the latter formula is regular at all points $\zeta = S_j,\ j = 1,2,\ldots$. Relation (0.31) follows now from the assumption that all stationary points of the function $S(\varphi)$ are non-degenerated ones.

Relations (0.30) and (0.31) together with the result of Proposition 1 (see also Remark 2) allow us to compute the asymptotic expansion of solution $u(r,\varphi)$ to equation (0.17). Namely, as it was told above, the contour Γ involved into the representation (0.24) must encircle all the singular points of the function $\tilde{U}(z,\varphi)$. Deforming this contour in a way shown on Figure 0.5, we represent the function $u(r,\varphi)$ as a sum of representations of the form (0.24) with contours Γ of the special form considered above. After this, applying the results of Proposition 1 and Remark 2, we arrive at the following asymptotic expansion of the solution $u(r,\varphi)$:

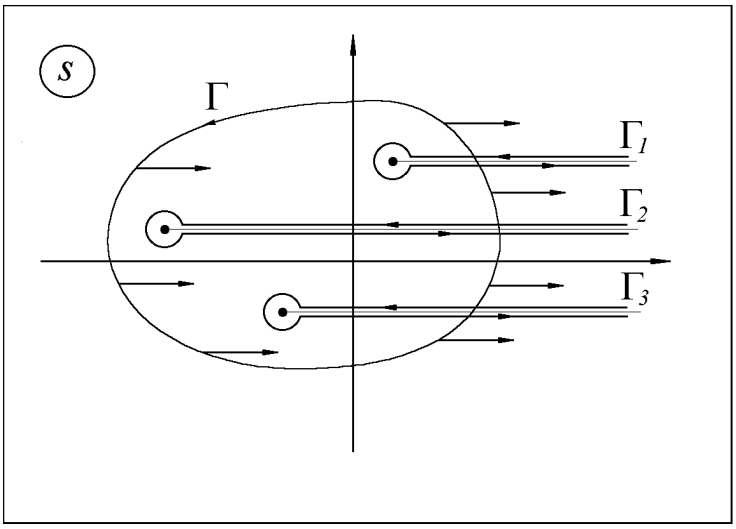

Figure 0.5. Decomposition of the contour into the sum of standard ones.

$$u(r,\varphi) \simeq \sum_k r^{kc}\left(C_{1k}e^{ik\varphi} + C_{2k}e^{-ik\varphi}\right) + r^{-S(\varphi)}\sum_{j=1}^{\infty} a_j(\varphi)\ln^{-j} r$$
$$+ \sum_k r^{-S_k}\sum_{j=0}^{\infty} a_j^{(k)}(\varphi)\ln^{-j+\frac{1}{2}} r. \tag{0.32}$$

Discussion on the obtained asymptotics of the solution will be given in Subsection 0.2.3.

0.2.2 Cuspidal case

1. Here we shall consider the class of equations on manifolds with singularities for which solutions to a homogeneous equation have *exponential* behavior near a singular point of the underlying manifold. Such a situation takes place for equations on manifolds with so-called *cuspidal singularities*. The simplest example of such singularities can be constructed in the following way.

Let C be a surface in the three-dimensional space $\mathbf{R}^3$ with coordinates (x, y, z) obtained by rotation of the curve $x = z^{1+\alpha}$ around the Oz axis; here α is a real nonnegative number (see Figure 0.2). Denote by φ the polar angle in the plane Oxy.

It is clear that (z, φ) form a coordinate system on the surface C. The restriction g of the standard Riemannian metric in $\mathbf{R}^3$ to C is given by

$$ds^2 = \left(1 + \alpha^2 z^2\right) dz^2 + z^{2+2\alpha}\, d\varphi^2,$$

and the corresponding Beltrami-Laplace operator has the form

$$\Delta_g = z^{-2(1+\alpha)} \left[\frac{1}{1+\alpha^2 z^2} \left(z^{1+\alpha} \frac{\partial}{\partial z} \right)^2 - \frac{\alpha^3 z^{3\alpha}}{\left(1+\alpha^2 z^2\right)^2} \left(z^{1+\alpha} \frac{\partial}{\partial z} \right) + \frac{\partial^2}{\partial \varphi^2} \right]. \tag{0.33}$$

The analysis of the latter formula allows one to introduce the appropriate form of a general differential operator on the manifold C with cuspidal singular point. This form is

$$\hat{H} = z^{-m(1+\alpha)} H \left(z, z^{\alpha}, \varphi, i z^{1+\alpha} \frac{\partial}{\partial z}, -i \frac{\partial}{\partial \varphi} \right), \tag{0.34}$$

where $H\left(z_1, z_2, \varphi, p_z, p_\varphi\right)$ is a polynomial in (p_z, p_φ) of degree m with coefficients smooth in (z_1, z_2, φ). We remark that in the case of integer α, that is, $\alpha = k \in \mathbf{Z}_+$, the general differential operators on C can be rewritten in the form

$$\hat{H} = z^{-m(1+k)} H \left(z, \varphi, i z^{1+k} \frac{\partial}{\partial z}, -i \frac{\partial}{\partial \varphi} \right).$$

In this introduction we shall consider only this last case[3].

So, let us conider the equation

$$\hat{H} u = H \left(z, \varphi, i z^{1+k} \frac{\partial}{\partial z}, -i \frac{\partial}{\partial \varphi} \right) u = 0 \tag{0.35}$$

(we have omitted the factor $z^{-m(1+k)}$ since it is evidently inessential for investigation of solutions to homogeneous equations $\hat{H} u = 0$). To understand the type of behavior of solutions to equation (0.35) as $z \to 0$, we consider first equations with constant coefficients. To be short, let us carry out our considerations on the example of the equation

$$\left[\left(z^{1+k} \frac{\partial}{\partial z} \right)^2 + c^2 \left(\frac{\partial}{\partial \varphi} \right)^2 \right] u = 0 \tag{0.36}$$

with some positive constant c. This equation can be solved by means of separation of variables. Namely, let us search for solutions to this equation in the form

$$u\left(z, \varphi\right) = Z\left(z\right) \Phi\left(\varphi\right).$$

[3] We suppose also that $k > 0$ since the case $k = 0$ was considered in the previous subsections.

Substituting the latter expression to equation (0.36), we obtain

$$\frac{1}{c^2 Z(z)}\left(z^{1+k}\frac{\partial}{\partial z}\right)^2 Z(z)+\frac{1}{\Phi(\varphi)}\left(\frac{\partial}{\partial\varphi}\right)^2\Phi(\varphi)=0,$$

and, hence,

$$\left(z^{1+k}\frac{\partial}{\partial z}\right)^2 Z(z)=c^2 s^2 Z(z),\ \left(\frac{\partial}{\partial\varphi}\right)^2\Phi(\varphi)=-s^2\Phi(\varphi)$$

for some constant s. It is easy to see that the solution to the latter system of equations is

$$Z(z)=\exp\left\{\pm\frac{cs}{kz^k}\right\},\ \Phi(\varphi)=\exp\{\pm is\varphi\}$$

(clearly, since $\Phi(\varphi)$ is a function on the circle, the number s have to be integer). So, we obtain the following solutions to equation (0.36):

$$u(z,\varphi)=C\exp\left\{\pm\frac{cs}{kz^k}\right\}\exp\{\pm is\varphi\},\ s\in\mathbf{Z}.$$

Let us make some conclusions from the considered example.

First, we see that solutions to a homogeneous equation on a manifold with cuspidal singular points have *exponential type* at these points with degree coinciding with the order of the singular point.

Second, the corresponding WKB-elements must be of the form

$$u(z,\varphi)=\exp\left\{\frac{S(\varphi)}{kz^k}\right\}a(z,\varphi),\tag{0.37}$$

where $a(z,\varphi)$ admits a regular asymptotic expansion in powers of z:

$$a(z,\varphi)=\sum_{j=0}^{\infty}z^j a_j(\varphi).\tag{0.38}$$

The function $\exp\{s/kz^k\}$ used in expression (0.37) for a WKB-element is none more than an eigenfunction of the operator $-z^{1+k}\partial/\partial z$ with the eigenvalue s.

Let us pass to examination of the behavior of solutions to homogenous equations with variable (in z) coefficients. It occurs that all the effects can be seen on the example

$$\left[\left(-z^{1+k}\frac{\partial}{\partial z}\right)^2+c^2\left(\frac{\partial}{\partial\varphi}\right)^2+2+bz\right]u=0,$$

where b and c are nonvanishing constants (as above, we suppose that $c > 0$). As we shall see below, the cases $k = 1$ and $k > 1$ are essentially different, and we shall consider two cases $k = 1$ and $k = 2$.

2. Let us begin our considerations with the case $k = 1$. We search for solutions to the equation

$$\left[\left(-z^2\frac{\partial}{\partial z}\right)^2 + c^2\left(\frac{\partial}{\partial\varphi}\right)^2 + 2 + bz\right]u = 0 \tag{0.39}$$

in the form

$$u(z,\varphi) = \exp\left\{\frac{S(\varphi)}{z}\right\}a(z,\varphi) \tag{0.40}$$

Since

$$\left(-z^2\frac{\partial}{\partial z}\right)\exp\left\{\frac{S(\varphi)}{z}\right\}a(z,\varphi) = \exp\left\{\frac{S(\varphi)}{z}\right\}\left[S(\varphi) - z^2\frac{\partial}{\partial z}\right]a(z,\varphi),$$

$$\left(\frac{\partial}{\partial\varphi}\right)\exp\left\{\frac{S(\varphi)}{z}\right\}a(z,\varphi) = \exp\left\{\frac{S(\varphi)}{z}\right\}\left[\frac{1}{z}\frac{\partial S(\varphi)}{\partial\varphi} + \frac{\partial}{\partial\varphi}\right]a(z,\varphi),$$

the substitution of the right-hand part of (0.40) into equation (0.39) gives

$$\left[\left(S(\varphi) - z^2\frac{\partial}{\partial z}\right)^2 + c^2\left(\frac{1}{z}\frac{\partial S(\varphi)}{\partial\varphi} + \frac{\partial}{\partial\varphi}\right)^2 + 2 + bz\right]a(z,\varphi) = 0. \tag{0.41}$$

Similar to the conical case, we see that the operator $z^2\partial/\partial z$ is weaker in the asymptotic sense than the operator $\partial/\partial\varphi$. However, in this case the *large parameter* of asymptotic expansion is z^{-1}. The latter fact explains the form (0.38) of regular dependence of the amplitude function $a(z,\varphi)$ on z.

Let us now substitute expansion (0.38) to equation (0.41) and separate coefficients of powers of z in the obtained expression. The main term (coefficient of z^{-2}) gives

$$c^2\left(\frac{\partial S(\varphi)}{\partial\varphi}\right)^2 a_0(\varphi) = 0.$$

Since we are searching for nontrivial solutions to equation (0.39), we can suppose that $a_0(\varphi) \neq 0$, and, hence,

$$S(\varphi) = S = \text{const}.$$

Taking in account this relation, one can see that the coefficient of z^{-1} vanishes identically. Later on, the next equation (obtained by equationg to zero the coefficient

of z^0) reads

$$\frac{d^2 a_0(\varphi)}{d\varphi^2} + \left(S^2 + 2\right) a_0(\varphi) = 0.$$

Since the function $a_0(\varphi)$ is a function on a circle, one obtains that

$$S^2 + 2 = k^2, \quad k \in \mathbf{Z},$$

and the function $a_0(\varphi)$ corresponding to such value of S equals

$$a_0(\varphi) = C_0 \exp\{\pm ik\varphi\} \tag{0.42}$$

with some nonvanishing constant C_0. Up to now, the construction of asymptotic solution in the form (0.40) met no difficulties. However, the next equation obtained by our recurrent procedure

$$\frac{d^2 a_1(\varphi)}{d\varphi^2} + \left(S^2 + 2\right) a_1(\varphi) = -b a_0(\varphi)$$

occurs to be *unsolvable* for the above found values of S and $a_0(\varphi)$. Actually, it can be rewritten in the form

$$\frac{d^2 a_1(\varphi)}{d\varphi^2} + k^2 a_1(\varphi) = -b C_0 \exp\{\pm ik\varphi\},$$

and the orthogonality condition is fulfilled only for $C_0 = 0$! So, we conclude that there exists *no solution* to equation (0.39) of the form (0.40).

The situation can be improved by the following modification of the form of asymptotic expansion (0.40):

$$u(z,\varphi) = \exp\left\{\frac{S(\varphi)}{z}\right\} z^\gamma a(z,\varphi), \tag{0.43}$$

where γ is some (unknown, up to the moment) parameter, and $a(z,\varphi)$ is still determined by relation (0.38). For this new ansatz, the first three relations are the same as in the above case, and we obtain that

$$S^2 + 1 = k^2, \; k \in \mathbf{Z},$$

and $a_0(\varphi)$ is defined by formula (0.42). But for the new form of solution the next equation reads

$$\frac{d^2 a_1(\varphi)}{d\varphi^2} + \left(S^2 + 2\right) a_1(\varphi) = (2S\gamma - b) a_0(\varphi),$$

and we can satisfy the orthogonality condition by choosing

$$\gamma = \frac{b}{2S}.$$

For such choice of γ, the function $a_1(\varphi)$ is given by

$$a_1(\varphi) = C_1 \exp\{\pm ik\varphi\} \tag{0.44}$$

with some constant C_1. To determine this constant one has to write down the next equation (equating to zero the coefficient of z^2):

$$\frac{d^2 a_2(\varphi)}{d\varphi^2} + \left(S^2 + 2\right) a_2(\varphi) = 2Sa_1(\varphi) - \gamma(\gamma+1) a_0(\varphi)$$

(we have used the above determined value of γ). To satisfy the compatibility condition for this latter equation one must require that:

a) the signs in formulas (0.42) and (0.44) are equal to each other;

b) the constants C_0 and C_1 satisfy the relation $2SC_1 - \gamma(\gamma+1) C_0 = 0$, that is,

$$C_1 = \frac{\gamma(\gamma+1)}{2S} C_0.$$

The further procedure of determining the functions $a_j(\varphi)$ goes quite similar, and we shall not describe it in detail.

Let us make some conclusions from the above considerations.

First, solutions to differential equations on manifolds with singularities of cuspidal type have the form (0.43), where $a(z,\varphi)$ is an *infinite* series in powers of z:

$$a(z,\varphi) = \sum_{j=0}^{\infty} z^j a_j(\varphi).$$

We remark that, as a rule, these series are *divergent*.

Second, if we want to consider *linear combinations* of such solutions (which is nesessary for the description of the kernel of the differential operator considered), then we have to include into consideration a *resummation procedure* for correct description of asymptotic expansions of the form

$$u(z,\varphi) = \exp\left\{\frac{S_1(\varphi)}{z}\right\} z^{\gamma_1} a_1(z,\varphi) + \exp\left\{\frac{S_2(\varphi)}{z}\right\} z^{\gamma_2} a_2(z,\varphi) + \dots.$$

Third, it is clear that the same situation takes place also in consideration of *nonhomogeneous* equations with WKB-type right-hand part. We shall not present here these considerations; the reader can carry them out by herself or himself.

3. Let us pass to the consideration of the case of cuspidal point of the *second degree* ($k = 2$). This case will be illustrated on the example of the following equation:

$$\left[\left(-z^3\frac{\partial}{\partial z}\right)^2 + c^2\left(\frac{\partial}{\partial\varphi}\right)^2 + 2 + bz\right]u = 0. \tag{0.45}$$

From the above considerations, it seems that solutions to such an equation can be searched in the form

$$u(z,\varphi) = \exp\left\{\frac{S(\varphi)}{2z^2}\right\} z^\gamma a(z,\varphi), \tag{0.46}$$

where $a(z,\varphi)$ is a power series in z. It occurs, however, that equation (0.45) has no solutions of this form (the simple verification of this fact is left to the reader). The reason for this phenomenon is that the phase function (that is, the function standing in the exponent) has more complicated structure than in (0.46). To find out this structure and to construct asymptotic solutions in this case, we shall use another method also based on WKB-approximation.

To this end, we slightly modify equation (0.45) in the following manner

$$\left[\left(-hz^3\frac{\partial}{\partial z}\right)^2 + c^2\frac{\partial^2}{\partial\varphi^2} + 2 + bz\right]u = 0, \tag{0.47}$$

where h is an auxiliary parameter. We shall expand solutions to this equation in powers of h, and then we shall show that the obtained expansion is also an expansion in powers of z. The asymptotic expansions of solutions to the initial equation can be obtained then at $h = 1$.

Let us search for solutions to equation (0.47) in the form[4]

$$u(z,\varphi,h) = \exp\left\{\frac{S(z)}{h}\right\}\sum_{j=0}^{\infty} h^j a_j(z,\varphi),$$

where $S(z)$ and $a_j(z,\varphi)$ are functions of (z,φ) regular outside $z = 0$. Substituting the latter relation into equation (0.47) and separating the powers of h, we obtain the

[4]For a reader familiar with WKB-theory, we remark that the above equation is considered as $1/h$-differential equation ([4], [8]) in the variable z with operator-valued coefficients along the variable φ. This explains, in particular, the form of the WKB-element introduced below.

following system for defining the action $S(z)$ and the amplitude functions $a_j(z,\varphi)$:

$$\begin{aligned}
&\left[c^2\frac{\partial^2}{\partial\varphi^2}+\left(\left(z^3\frac{dS}{dz}\right)^2+2+bz\right)\right]a_0=0,\\
&\left[c^2\frac{\partial^2}{\partial\varphi^2}+\left(\left(z^3\frac{dS}{dz}\right)^2+2+bz\right)\right]a_1=-\left[2z^6\frac{dS}{dz}\frac{\partial}{\partial z}+3z^5\frac{dS}{dz}\right.\\
&\left.+z^6\frac{d^2S}{dz^2}\right]a_0, \qquad (0.48)\\
&\left[c^2\frac{\partial^2}{\partial\varphi^2}+\left(\left(z^3\frac{dS}{dz}\right)^2+2+bz\right)\right]a_j=-\left[2z^6\frac{dS}{dz}\frac{\partial}{\partial z}+3z^5\frac{dS}{dz}\right.\\
&\left.+z^6\frac{d^2S}{dz^2}\right]a_{j-1}-\left(z^3\frac{\partial}{\partial z}\right)^2a_{j-2},\ j\geq 2.
\end{aligned}$$

Since we require $a_0\neq 0$, the first equation from (0.48) shows that the quantity

$$-\left[\left(z^3\frac{dS}{dz}\right)^2+2+bz\right]$$

must be an eigenvalue of the operator $c^2\partial^2/\partial\varphi^2$ for any value of z, and the function $a_0(z,\varphi)$ must belong to the corresponding eigenspace. Since the eigenvalues of this operator are of the form

$$\lambda=-k^2,\ \ k\in\mathbf{Z},$$

and the corresponding eigenspaces are generated by the functions

$$\exp\{ik\varphi\},\ \exp\{-ik\varphi\}, \qquad (0.49)$$

for $k\neq 0$, and consists of constants for $k=0$, we obtain the *Hamilton-Jacobi equation*

$$\left(z^3\frac{dS^{(k)}(z)}{dz}\right)^2+2+bz=k^2,\ k\in\mathbf{Z}, \qquad (0.50)$$

and the relations

$$\begin{aligned}
a_0^{(k)}(z,\varphi) &= C_{0+}^{(k)}(z)\exp\{ik\varphi\}+C_{0-}^{(k)}(z)\exp\{-ik\varphi\},\ k\neq 0,\\
a_0^{(0)}(z,\varphi) &= C_0^{(0)}(z).
\end{aligned}$$

Suppose that $S^{(k)}(z)$ is some solution to equation (0.50) (to be short, we consider only the case $k\neq 0$). Let us consider the second equation in system (0.48). For this

equation to be solvable with respect to a_1, its right-hand part have to be orthogonal to both functions (0.49). The two orthogonality conditions give us *transport equations* with respect to the two functions $C_{0\pm}^{(k)}(z)$:

$$\left[2z^6\frac{dS}{dz}\frac{d}{dz}+3z^5\frac{dS}{dz}+z^6\frac{d^2S}{dz^2}\right]C_{0\pm}^{(k)}(z)=0. \tag{0.51}$$

Provided that the constants $C_{0\pm}^{(k)}(z)$ satisfy equation (0.51), the general solution to the second equation in (0.48) is

$$a_1^{(k)}(z,\varphi)=C_{1+}^{(k)}(z)\exp\{ik\varphi\}+C_{1-}^{(k)}(z)\exp\{-ik\varphi\}.$$

Similar, all the rest transport equations have the form

$$\left[2z^6\frac{dS}{dz}\frac{d}{dz}+3z^5\frac{dS}{dz}+z^6\frac{d^2S}{dz^2}\right]C_{j\pm}^{(k)}(z)=-\left(z^3\frac{d}{dz}\right)^2C_{j-1\pm}^{(k)}(z),\ j\geq 1, \tag{0.52}$$

and the functions $a_j^{(k)}(z,\varphi)$, $j\geq 2$ are given by

$$a_j^{(k)}(z,\varphi)=C_{j+}^{(k)}(z)\exp\{ik\varphi\}+C_{j-}^{(k)}(z)\exp\{-ik\varphi\}.$$

Let us analyze the behavior of functions $S^{(k)}(z)$ and $a_j^{(k)}(z,\varphi)$ as $z\to 0$. First of all, from the Hamilton-Jacobi equation it follows that

$$S^{(k)}(z)=-\frac{\sqrt{k^2-2}}{2z^2}+\frac{b}{2z}-\frac{b^2}{8\sqrt{k^2-2}}\ln z+f.h.,$$

where by $f.h.$ we have denoted a function holomorphic in a neighborhood of the origin. Later on, from the latter relation one can see that the transport equations can be rewritten in the form

$$\left\{\left[\sqrt{k^2-2}+O(z)\right]\frac{d}{dz}-\left[\frac{b}{2\sqrt{k^2-2}}+O(z)\right]\right\}C_{0\pm}^{(k)}(z)=0,$$
$$\left\{\left[\sqrt{k^2-2}+O(z)\right]\frac{d}{dz}-\left[\frac{b}{2\sqrt{k^2-2}}+O(z)\right]\right\}C_{j\pm}^{(k)}(z)=\left(z^3\frac{d^2}{dz^2}\right.$$
$$\left.+3z^2\frac{d}{dz}\right)C_{j-1\pm}^{(k)}(z),\ j\geq 1.$$

Now, it is not hard to show by induction that one can choose the solution to this recurrent system having the form

$$C_{j\pm}^{(k)}(z) = z^{2j} B_{j\pm}^{(k)}(z)$$

with regular $B_{j\pm}^{(k)}(z)$, and that $B_{j\pm}^{(k)}(z)$ are determined up to (one and the same for all j) multiplicative constant. So, we have constructed asymptotic solutions to equation (0.45) of the form

$$\begin{aligned} u_k(z,\varphi) &= \exp\left\{-\frac{\sqrt{k^2-2}}{2z^2} + \frac{b}{2z} - \frac{b^2}{8\sqrt{k^2-2}}\ln z + F(z)\right\} \\ &\times \sum_{j=0}^{\infty} z^{2j}\left[B_{j+}^{(k)}(z)\exp\{ik\varphi\} + B_{j-}^{(k)}(z)\exp\{-ik\varphi\}\right] \end{aligned} \tag{0.53}$$

with $F(z)$, $B_{j+}^{(k)}(z)$, and $B_{j-}^{(k)}(z)$ regular in the neighborhood of the origin. Now, expanding the functions $\exp\{F(z)\}$, $B_{j+}^{(k)}(z)$, and $B_{j-}^{(k)}(z)$ in the Taylor series and rearranging the obtained expansion, we arrive finally to the asymptotic solutions to homogeneous equation (0.45) of the form

$$u_k(z,\varphi) = \exp\left\{-\frac{\sqrt{k^2-2}}{2z^2} + \frac{b}{2z}\right\} z^{\gamma} \sum_{j=0}^{\infty} z^j \left[c_{j+}^{(k)}\exp\{ik\varphi\} + c_{j-}^{(k)}\exp\{-ik\varphi\}\right],$$

where

$$\gamma = -\frac{b^2}{8\sqrt{k^2-2}}.$$

The obtained asymptotic expansion shows, in particular, the reason why (0.46) is not an appropiate form of asymptotic expansion of solutions to a homogeneous equation in case of cuspidal singularities of higher order. It is clear also that for any $k > 1$ solutions to a homogeneous equation have asymptotic expansions of the form

$$u(z,\varphi) = \exp\left\{\sum_{j=1}^{k} \frac{S_j(\varphi)}{z^j}\right\} z^{\gamma} \sum_{j=0}^{\infty} z^j a_j(\varphi)$$

with infinite series on the right. So, we see that, in the case of cuspidal singularities, the application of the *resurgent analysis* (that is, *resummation of divergent power series*) is nesessary even for solutions to homogeneous equations.

0.2.3 Stokes phenomenon. Generalizations

Let us consider in more detail the above obtained asymptotic expansion (0.32). The first sum on the right in this asymptotic relation is not of interest for us since it

corresponds to solutions of a homogeneous equation (clearly, the set of integers k involved into this sum must be bounded from below). However, the second and the third terms on the right in (0.32) need more detailed analysis.

1. Let us suppose that the numbers S_k involved into relation (0.32) are ordered in such a way that

$$\operatorname{Re} S_{k'} < \operatorname{Re} S_{k''} \text{ for } k' < k''.$$

Then all terms of the series

$$r^{-S_1} \sum_{j=0}^{\infty} a_j^{(1)}(\varphi) \tag{0.54}$$

have larger order than all terms of the series

$$r^{-S_2} \sum_{j=0}^{\infty} a_j^{(2)}(\varphi), \tag{0.55}$$

and so on. Therefore, the sense of asymptotic expansion (0.32) becomes *unclear*. Actually, if some expression is an asymptotic expansion in the usual sense, one has to consider its terms one-by-one in such a way that the order of each next term is less than the order of the previous one. However, in the considered case, it is impossible since the series (0.54) has the infinite number of terms and we shall never reach any term of the series (0.55) during the described step-by-step procedure. The situation with the term

$$r^{-S(\varphi)} \sum_{j=1}^{\infty} a_j(\varphi) \ln^{-j} r$$

is even worse, since the position of the number $\operatorname{Re} S(\varphi)$ on the real axis with respect to positions of the numbers $\operatorname{Re} S_k$, $k = 1, 2, \ldots$ can be different for different values of φ (the so-called *change of the leadership*; this position determines the order of the considered term with respect to orders of all the rest terms of the asymptotic expansion in question).

If the series involved to any term of asymptotic expansion were convergent, one could improve the situation by extracting from the expanded function the sums of terms having the greater order and then considering the terms of the greatest order in the remainder. Unfortunately, the corresponding sums are, as a rule, *divergent*, and this simple scheme does not work. The other way to overcome the mentioned difficulty is to *resummate* the series of the greatest order, that is, to consider some function (not formal series!) having the given asymptotic expansion, and then to use the scheme described above for the case of convergent series. One should have in mind, that the resummation procedure is not unique, and that the terms of the series

which have the less order depend on the resummation procedure used for terms of higher order. (For bad resummation procedure the further terms of the asymptotic expansion can even not to exist!) The procedure we shall use for resummation connected with the so-called *resurgent representation* introduced by B. Sternin and V. Shatalov (see [25].)

2. The another feature of the asymptotic expansions of the considered type is that the resurgent asymptotic expansion of some function $u(r,\varphi)$ (say, of a solution to equation (0.17)) can be changed by *jump* at some values of the variable φ. To understand the reason of this phenomenon (known in the literature as the *Stokes phenomenon*), let us consider a WKB-element of power growth given by

$$m\left[\tilde{U}(z,\varphi)\right] = \frac{1}{2\pi i}\int\limits_{\Gamma} r^{z}\tilde{U}(z,\varphi)\,dz, \tag{0.56}$$

where the integration contour Γ is a contour of the special kind encircling the point of singularity $s=\rho S(\varphi)$. Then this element has the asymptotic expansion involving exactly one term of the form (0.56) on the right in (0.24). Now let us suppose that the variable φ is changed in such a way that some point of singularity $z=S_1(\varphi)$ of the function $\tilde{U}(z,\varphi)$ (different from $z=S(\varphi)$) intersects Γ. Then this second point of singularity will extract the additional contour Γ' from the integration contour Γ, as it is shown on Figure 0.6[5]. Thus, after this intersection one obtains a function with asymptotic expansion consisting of two terms of the form (0.24). This is exactly the Stokes phenomenon.

[5] The number of extracted contours depend on the global structure of the Riemannian surface of the function $U(s,\varphi,\rho)$; we consider here the typical situation.

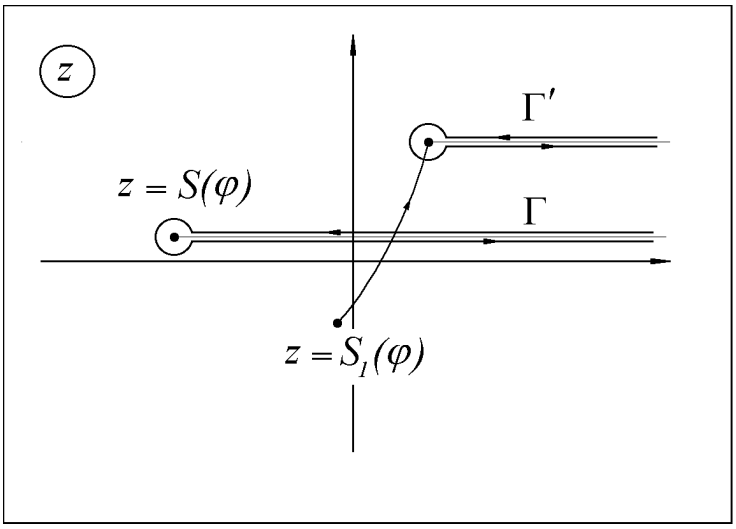

Figure 0.6. Stokes phenomenon.

0.3 Finiteness theorems (Fredholm property)

0.3.1 Asymptotic behavior and statements of the problem

In this section, we shall show on the concrete example how the knowledge of the asymptotic behavior of solutions to a differential equation on manifolds with singularities affects statements of the problem for such equations in function spaces. As a byproduct, we shall see that the asymptotics of solutions at one of singular points determines uniquely that at the others. Since the considerations are quite similar in conical and cuspidal cases, we shall consider only the conical case.

1. First of all we remark that the choice of function spaces for a differential equation strongly depends on the behavior of solutions to these equations in a neighborhood of their singular points. Namely, function spaces used in the investigation of a differential equation must contain solutions to the corresponding homogeneous equation. Moreover, these spaces must be scaled in such a way that the obtained space scale separates different solutions to the homogeneous equation (and, clearly,

encounters in the appropriate manner the smoothness of these solutions). Since in the case of manifolds with conical singularities, as we have seen in the preceding section, solutions to the homogeneous equation have *power* behavior in the variable r near singular points of the underlying manifold M, all the above requirements are satisfied if we use the two-parameter scale consisting of the so-called *weighted Sobolev spaces* $H_\gamma^s(M)$ locally defined by the norm

$$\|u\|_{s,\gamma}^2 = \int_0^\infty r^{-2\gamma} \left\| \left(1 - \left(r\frac{\partial}{\partial r}\right)^2 + \Delta_\Omega\right)^{s/2} u \right\|_{L_2(\Omega)}^2 \frac{dr}{r}$$

near singular pointe of M, and coincides with the standard Sobolev spaces $H^s(M)$ outside the set of singular points. Here s and γ are real parameters, and Δ_Ω is a positive Beltrami-Laplace operator on the base Ω of the corresponding cone. This scale measures smoothness of functions (with the help of the parameter s), and the behavior near its singular points (via the parameter γ).

2. Let us illustrate the connection between asymptotic behavior of solutions to the equation

$$\hat{D}u = 0$$

and the investigation of the operator of order m

$$\hat{D} \ : \ H_\gamma^s(M) \ \to \ H_\gamma^{s-m}(M) \tag{0.57}$$

on a manifold with conical points by a simple example.

Consider the operator

$$\hat{D} = \frac{1}{(1-x^2)^2}\left[\left((1-x^2)\frac{\partial}{\partial x}\right)^2 + \frac{\partial^2}{\partial \varphi^2}\right] \tag{0.58}$$

given on the surface of the spindle S (see Figure 0.7). Here x is a coordinate along the axis of the spindle, $-1 < x < 1$ and φ is the coordinate corresponding to the rotation around this axis. It is easy to check that the full system of solutions to equation (0.57) for such an operator is

$$\begin{aligned} u_k^\pm(x,\varphi) &= \left(\frac{1+x}{1-x}\right)^k e^{\pm ik\varphi}, \ k \neq 0, \\ u_0(x,\varphi) &= A + B\ln\frac{1+x}{1-x}, \end{aligned} \tag{0.59}$$

where k is an integer. So, one can see that if a solution to equation (0.57) behaves as $(1+x)^k$ at one of the vertexes $x = -1$ of the spindle, then this solution necessarily

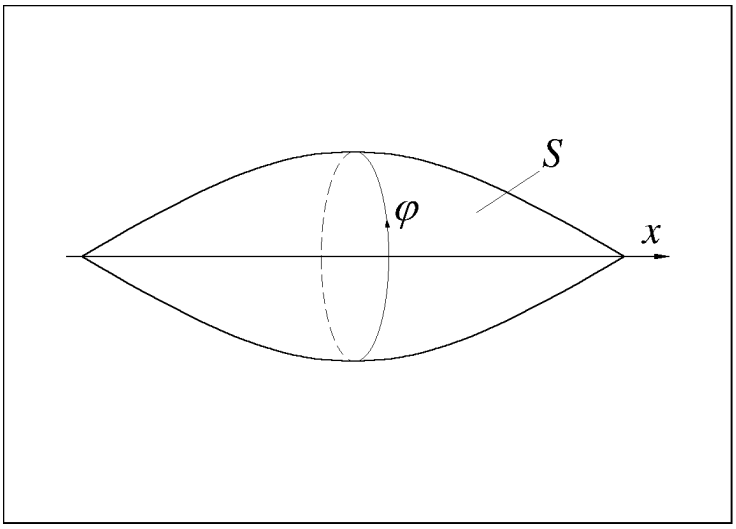

Figure 0.7. The spindle.

behaves as $(1-x)^{-k}$ at the other its vertex $x=1$. This fact allows one, in particular, to investigate the correct statements of the problem for the operator

$$\hat{D} = \left(\left(1-x^2\right) \frac{\partial}{\partial x} \right)^2 + \frac{\partial^2}{\partial \varphi^2} \ : \ H_\gamma^s(S) \ \to \ H_\gamma^s(S) \tag{0.60}$$

(to be short, we had omitted the factor $(1-x^2)^{-2}$ in the expression (0.58) for the operator $\hat{D}$) considered in the weighted Sobolev spaces $H_\gamma^s(S)$, $\gamma = (\gamma_0, \gamma_1)$. We remark that the latter spaces are defined on the spindle S with the help of the norm

$$\|u\|_{s,\gamma}^2 = \int_{-1}^{1} \int_{0}^{2\pi} (1+x)^{-2\gamma_0} (1-x)^{-2\gamma_1} \left| \left(1-\hat{D}\right)^{s/2} u(x,\varphi) \right|^2 d\varphi \, \frac{dx}{(1-x^2)}. \tag{0.61}$$

Here γ_0 and γ_1 are weights at points $x=-1$ and $x=1$, respectively.

One of the requirements for operator (0.60) to be an isomorphism is that the *kernel* of this operator must vanish. From the other hand, the functions $u_k^{\pm}(x,\varphi)$ given by (0.59) belong to spaces $H_\gamma^s(S)$ for $\gamma_0 < k$, $\gamma_1 < -k$ (and arbitrary values of s). From this fact it follows that for operator (0.60) to have zero kernel it is necessary to require that the interval $(\gamma_0, -\gamma_1)$ does not contain any integer k. Actually, if we fix the value γ_0, then all elements $u_k^{\pm}(x,\varphi)$ of the kernel with $k > \gamma_0$ will belong

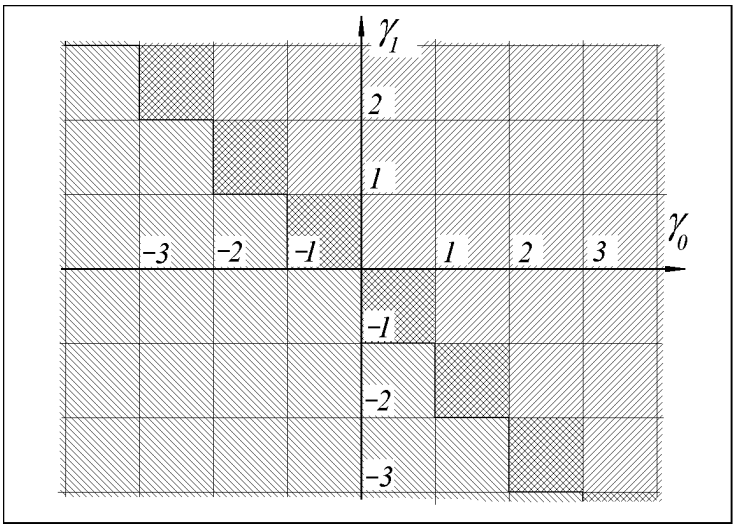

Figure 0.8. Kernel, cokernel, and the isomorphism region of the operator $\hat{a}$.

to the space $H^s_\gamma(S)$ at the left vertex $x = -1$ of the spindle S. Later on, as it was already mentioned, the behavior of the solution $u^\pm_k(x,\varphi)$ at the left vertex prescribes the behavior of this solution at the right vertex. Namely, if the solution is of order $(1+x)^k$ at $x = -1$, then it is of order $(1-x)^{-k}$ at $x = 1$. Hence, for operator (0.60) to have the zero kernel, it is necessary to require that all elements of its kernel $u^\pm_k(x,\varphi)$ which belong to the space $H^s_\gamma(S)$ at the left vertex $x = -1$ do not belong to this space at the right vertex $x = 1$ of the spindle S. This means that any value of k subject to the inequality $k > \gamma_0$ must satisfy the condition $k \geq -\gamma_1$, because the latter inequality is equivalent to the fact that the function $u^\pm_k(x,\varphi)$ does not belong to the space $H^s_\gamma(S)$ at $x = 1$. So, the domain on the plane (γ_0, γ_1) where the operator $\hat{D}$ has zero kernel is such as it is shown on Figure 0.8 (the upper dashed region).

To investigate the *cokernel* of this operator we remark that the adjoint operator[6]

$$\hat{D}^* \ : \ H_{-\gamma}^{-s+m} \ \to \ H_{-\gamma}^{-s}$$

is given by the same expression. So, the domain on the plane (γ_0, γ_1), where operator (0.60) has zero cokernel is such as it is drawn on Figure 0.8 (the lower dashed region).

Now, combining the two obtained results one can construct the *isomorphism* region for the considered operator which is dashed twice on Figure 0.8.

The above analysis shows that

1) Asymptotic behavior of a solution at one of singular points strongly depends (and, in fact, is determined by the behavior of solutions at other singular points.

2) The asymptotic expansion of solutions near its singular points affects the correct statements of the problems of the corresponding differential operator.

0.3.2 Operator algebras (point-type singularities)

Here, we shall investigate the *solvability* of a differential equation on a manifold with singularities by more regular method connected with *operator algebras*. To illustrate the appearence of this notion, we consider again a differential equation on the surface of the spindle. For convinience we realize the spindle as the following factor

$$S = \{[0, +\infty] \times \Omega\} \, / \, \{[\{0\} \times \Omega] \cup [\{+\infty\} \times \Omega]\},$$

where, as above, Ω is a unit circle. Denote by (r, φ) the coordinates on S defined by the above representation (r is a coordinate in $[0, +\infty]$ and φ is an angle coordinate on the circle), and consider the following differential equation on S:

$$\left[\left(r \frac{\partial}{\partial r} \right)^2 + c^2 \frac{\partial^2}{\partial \varphi^2} \right] u = f. \tag{0.62}$$

Remark 3 One can easily see that this equation is of conical type not only near the point $r = 0$ but also near $r = +\infty$. Actually, with the help of the variable change $\rho = r^{-1}$ the equation is transformed to the form

$$\left[\left(-\rho \frac{\partial}{\partial \rho} \right)^2 + c^2 \frac{\partial^2}{\partial \varphi^2} \right] u = f$$

[6] with respect to the paring

$$\langle u, v \rangle = \int_{-1}^{1} \int_{0}^{2\pi} u(x, \varphi) \, v(x, \varphi) \, d\varphi \frac{dx}{(1 - x^2)}.$$

which is clearly an equation of conical type.

Remark 4 The operator

$$\hat{D} = \left(r\frac{\partial}{\partial r}\right)^2 + c^2\frac{\partial^2}{\partial\varphi^2} \tag{0.63}$$

coincides (for $c = 1$) with operator (0.60). Actually, the variable change

$$r = \sqrt{(1+x)(1-x)^{-1}}$$

reduces the first operator to the second one. Usage of the variable r is more convenient here for the technique applied below for the investigation of the operator.

1. To solve this equation, we shall use the Mellin transform

$$\tilde{u}(z,\varphi) = \mathcal{M}[u] = \int_0^\infty r^{-z} u(r,\varphi)\frac{dr}{r} \tag{0.64}$$

in the variable r. Let $H_\gamma^s(S)$ be a completion of the space $C_0^\infty((0,+\infty)\times\Omega)$ with respect to the norm

$$\|u\|_{s,\gamma}^2 = \int_0^\infty\int_0^{2\pi} r^{-2\gamma}\left|\left(1-\left(r\frac{\partial}{\partial r}\right)^2-\left(\frac{\partial}{\partial\varphi}\right)^2\right)^{s/2} u(r,\varphi)\right|^2\frac{dr}{r}d\varphi.$$

Then, as it is well-known, the Mellin transform $\mathcal{M}$ establishes a unitary isomorphism

$$\mathcal{M} \;:\; H_\gamma^s(S) \to \tilde{H}^s(\mathcal{L}_\gamma\times\Omega),$$

where $\mathcal{L}_\gamma$ is a vertical line $\operatorname{Re} z = \gamma$ in the complex plane $\mathbf{C}$ with coordinate z, and the norm in the space $\tilde{H}^s(\mathcal{L}_\gamma\times\Omega)$ is given by

$$\|\tilde{u}\|_\gamma^2 = \frac{1}{2\pi i}\int_{\mathcal{L}_\gamma}\int_0^{2\pi}\left|\left(1+|z|^2-\left(\frac{\partial}{\partial\varphi}\right)^2\right)^{s/2}\tilde{u}(z,\varphi)\right|^2 dz d\varphi.$$

The inverse operator is given by

$$\mathcal{M}_\gamma^{-1}[\tilde{u}(z,\varphi)] = \frac{1}{2\pi i}\int_{\mathcal{L}_\gamma} r^z\tilde{u}(z,\varphi)\,dz.$$

The important fact is that the transform $\mathcal{M}$ takes the operator $r\partial/\partial r$ into the multiplication by z, and, hence, one can determine functions of this operator with the help of the formula

$$F_\gamma\left(r\frac{\partial}{\partial r}\right)u = \mathcal{M}_\gamma^{-1}\left[F(z)\,\tilde{u}(z,\varphi)\right]$$

for any function $F(z)$ regular on the line $\mathcal{L}_\gamma$ and satisfying the estimate

$$|F(z)| \leq C(1+|z|)^m$$

for some $C>0$ and m. One can consider even *operator-valued* functions $F(z)$ with values in operators on Ω satisfying the appropriate estimates. It is easy to see that the set of operators $F_\gamma(r\partial/\partial r)$ form a commutative algebra, and the mapping

$$F(z) \mapsto F_\gamma\left(r\frac{\partial}{\partial r}\right)$$

is an algebra homomorphism for each real γ.

Let us now realize the operator (0.63) involved into equation (0.62) as a bounded operator

$$\hat{D} \;:\; H^s_{\gamma_0,\gamma_1}(S) \to H^{s-2}_{\gamma_0,\gamma_1}(S), \tag{0.65}$$

where the spaces $H^s_{\gamma_0,\gamma_1}(S)$ are defined with the help of the norm

$$\|u\|^2_{s,\gamma_0,\gamma_1} = \int_0^\infty \psi_{\gamma_0,\gamma_1}(r)\left\|\left(1-\left(r\frac{d}{dr}\right)^2-\frac{\partial^2}{\partial\varphi^2}\right)^{s/2}u\right\|^2_{L_2(\Omega)}\frac{dr}{r}, \tag{0.66}$$

where the weight function $\psi_{\gamma_0,\gamma_1}(r)$ is a smooth function on $(0,+\infty)$ such that

$$\begin{aligned}\psi_{\gamma_0,\gamma_1}(r) &= r^{-2\gamma_0} \text{ near } r=0,\\ \psi_{\gamma_0,\gamma_1}(r) &= r^{-2\gamma_1} \text{ near } r=+\infty.\end{aligned}$$

Remark 5 Norm (0.66) coincides with the above introduced norm (0.61) with respect to the above mentioned variable change (see Remark 4).

The spaces $H^s_{\gamma_0,\gamma_1}(S)$ can be described in the alternative way with the help of a partition of unity $(e_0(r), e_1(r))$, where $e_j(r)$ are smooth nonnegative functions on $(0,+\infty)$ such that $e_0(r)\equiv 1$ near $r=0$, and $e_1(r)\equiv 1$ near $r=+\infty$. Namely, norm (0.66) is equivalent to the norm

$$\|u\|^2_{s,\gamma_0,\gamma_1} = \|e_0 u\|^2_{s,\gamma_0} + \|e_1 u\|^2_{s,\gamma_1}$$

(since these two norms are equivalent, we use one and the same notation for them).

Let us proceed now with solving equation (0.62) (or, what is the same, with inverting the operator (0.65)).

First of all, we consider the simplest case

$$\gamma_0 = \gamma_1 = \gamma.$$

In this case, applying the transform $\mathcal{M}$ to equation (0.62), we obtain the following equation on the "weight line" $\mathcal{L}_\gamma$:

$$\left[c^2 \frac{\partial^2}{\partial \varphi^2} + z^2\right] \tilde{u} = \tilde{f}.$$

Since the operator family

$$c^2 \frac{\partial^2}{\partial \varphi^2} + z^2 \tag{0.67}$$

is invertible on the circle Ω for any value of z except for

$$z = k, \; k \in \mathbf{Z}, \tag{0.68}$$

on each weight line $\mathcal{L}_\gamma$ free of points (0.68) we have

$$\tilde{u} = \hat{R}(z)\, \tilde{f},$$

where $\hat{R}(z)$ is an inverse for

$$c^2 \frac{\partial^2}{\partial \varphi^2} + z^2,$$

and, finally,

$$u = \hat{R}_\gamma \left(r \frac{\partial}{\partial r}\right) f$$

(we leave all the needed estimates to the reader). We remark that the family $\hat{R}(z)$ is a *meromorphic family* with poles at points (0.68), and the residues of this family at these points are finite-dimensional operators.

Even on this simplest example we can see the two substantial features of the theory of differential equations on manifolds with point-type singularities.

The first is that the equation in question is invertible not for all weights γ but for all except for spectral points of the operator family (0.67); this family is named the *conormal symbol* of the considered operator at the corresponding singular point.

The second is that the *resolving operator* can be found as a function of the operator $r\partial/\partial r$ with values in the ring of pseudodifferential operators on the base of the cone.

Let us consider now the more complicated case

$$\gamma_0 \neq \gamma_1$$

(to be definite, we suppose that $\gamma_0 < \gamma_1$). Here we see that the "weight lines" $\mathcal{L}_{\gamma_0}$ and $\mathcal{L}_{\gamma_1}$ are different, and, hence, we have to use different determinations of the operator $\hat{R}\left(r\partial/\partial r\right)$ at points $r = 0$ and $r = +\infty$. Namely, we shall try to construct the inverse operator in the form

$$\hat{R}f = \hat{R}_{\gamma_0}\left(e_0 f\right) + \hat{R}_{\gamma_1}\left(e_1 f\right). \tag{0.69}$$

First, we see that the multiplication by e_0 is a continuous operator from $H^{s-2}_{\gamma_0,\gamma_1}(S)$ to $H^{s-2}_{\gamma_0}(S)$, the operator $\hat{R}_{\gamma_0}$ is continuous from $H^{s-2}_{\gamma_0}(S)$ to $H^{s}_{\gamma_0}(S)$, and the space $H^{s}_{\gamma_0}(S)$ is continouosly embedded into the space $H^{s}_{\gamma_0,\gamma_1}(S)$ (since $\gamma_0 < \gamma_1$). Hence, the first summand in (0.69) determines a continuous operator from $H^{s-2}_{\gamma_0,\gamma_1}(S)$ to $H^{s,\gamma_0}_{\gamma_1}(S)$. Similar, the multiplication by e_1 is continuous from $H^{s-2}_{\gamma_0,\gamma_1}(S)$ to $H^{s-2}_{\gamma_1}(S)$, $\hat{R}_{\gamma_1}$ is continuous from $H^{s-2}_{\gamma_1}(S)$ to $H^{s}_{\gamma_1}(S)$, and $H^{s}_{\gamma_1}(S)$ is embedded continuously in $H^{s}_{\gamma_0,\gamma_1}(S)$. Hence, the second summand in (0.69) determines also a continuous operator, and, hence, the operator

$$\hat{R} \;:\; H^{s-2}_{\gamma_0,\gamma_1}(S) \;\to\; H^{s}_{\gamma_0,\gamma_1}(S)$$

is a continuous one.

Second, the composition $\hat{D}\hat{R}$ is an identity operator:

$$\hat{D}\hat{R}f = \hat{D}\hat{R}_{\gamma_0}\left(e_0 f\right) + \hat{D}\hat{R}_{\gamma_1}\left(e_1 f\right) = e_0 f + e_1 f = f,$$

and one has

$$\begin{aligned}
\hat{R}\hat{D}f \;=\; & \hat{R}_{\gamma_0}\left(e_0\hat{D}f\right) + \hat{R}_{\gamma_1}\left(e_1\hat{D}f\right) = \hat{R}_{\gamma_0}\hat{D}\left(e_0 f\right) + \hat{R}_{\gamma_1}\hat{D}\left(e_1 f\right) \\
& -\hat{R}_{\gamma_0}\left(\left[\hat{D}, e_0\right] f\right) - \hat{R}_{\gamma_1}\left(\left[\hat{D}, e_1\right] f\right) = e_0 f + e_1 f \\
& -\left(\hat{R}_{\gamma_1} - \hat{R}_{\gamma_0}\right)\left(\left[\hat{D}, e_1\right] f\right) = f - \hat{Q}f,
\end{aligned}$$

where

$$\hat{Q}f = \left(\hat{R}_{\gamma_1} - \hat{R}_{\gamma_0}\right)\left(\left[\hat{D}, e_1\right] f\right).$$

Here by $[\cdot,\cdot]$ we have denoted the commutator of the operators. Later on, since the function $\left(\left[\hat{D}, e_1\right] f\right)$ has compact support in $(0,+\infty)$, its Mellin transform is an entire function $F(z)$, and we have

$$\begin{aligned}\hat{Q}f &= \frac{1}{2\pi i}\left[\int\limits_{\mathcal{L}_{\gamma_1}} r^z \hat{R}(z) F(z)\, dz - \int\limits_{\mathcal{L}_{\gamma_0}} r^z \hat{R}(z) F(z)\, dz\right] \\ &= \sum_j \underset{z_j}{Res}\left(r^z \hat{R}(z) F(z)\right),\end{aligned}$$

where the sum is taken over all poles z_j of the operator-valued function $\hat{R}(z)$ lying between lines $\mathcal{L}_{\gamma_1}$ and $\mathcal{L}_{\gamma_0}$ (hence, this sum is finite). Since the operators involved in the principal part of the Loran expansion of $\hat{R}(z)$ are finite-dimensional, one sees that the operator $\hat{Q}$ is, in turn, a finite-dimensional one.

So, we have constructed an operator $\hat{R}$ such that

$$\hat{D}\hat{R} = \mathbf{1},\ \hat{R}\hat{D} = \mathbf{1} - \hat{Q} \tag{0.70}$$

with a finite-dimensional operator $\hat{Q}$. From here, it follows that:

i) The operator $\hat{D}$ has zero cokernel.

ii) It has a finite-dimensional kernel and the operator $\hat{Q}$ is the projector on $\operatorname{Ker}\hat{D}$.

Actually, the affirmation *i*) follows from the first relation (0.70). Later on, we have

$$\hat{Q}^2 = \left(\mathbf{1} - \hat{R}\hat{D}\right)\left(\mathbf{1} - \hat{R}\hat{D}\right) = \mathbf{1} - 2\hat{R}\hat{D} + \hat{R}\hat{D}\hat{R}\hat{D} = \mathbf{1} - \hat{R}\hat{D} = \hat{Q}$$

since $\hat{D}\hat{R} = \mathbf{1}$, and, hence, $\hat{Q}$ is a projector. We have

$$u - \hat{Q}u = \hat{R}\hat{D}u = 0 \text{ for any } u \in \operatorname{Ker}\hat{D},$$

and, hence, $\operatorname{Ker}\hat{D} \subset \operatorname{Im}\hat{Q}$. On the opposite,

$$\hat{D}\hat{Q} = \hat{D}\left(\mathbf{1} - \hat{R}\hat{D}\right) = \hat{D} - \hat{D}\hat{R}\hat{D} = 0,$$

which yields $\operatorname{Im}\hat{Q} \subset \operatorname{Ker}\hat{D}$, and we conclude that $\hat{Q}$ is a projector on the kernel $\operatorname{Ker}\hat{D}$ of the operator $\hat{D}$.

The case $\gamma_0 > \gamma_1$ can be considered quite similar. The regularizer in this case has the form

$$\hat{R}f = e_0\hat{R}_{\gamma_0}f + e_1\hat{R}_{\gamma_1}f,$$

and satisfies the relations

$$\hat{D}\hat{R} = \mathbf{1} - \hat{Q}', \ \hat{R}\hat{D} = \mathbf{1}.$$

Hence, in this case the kernel of the operator $\hat{D}$ vanishes, and the operator $\hat{Q}'$ is a projector on the cokernel of this operator.

2. Let us now make some conclusions from the above considered example.

First, in the general case, the questions of uniqueness and solvability for differential equations on manifolds with point-type singularities must be replaced by obtaining *finiteness theorems (Fredholm property)* for the corresponding operator, that is, by the investigation of uniqueness and solvability up to finite-dimensional subspaces of function spaces in question. As it follows from the asymptotic investigation of the kernel of the operator $\hat{D}$, the appropriate function spaces are weighted Sobolev spaces $H^s_\gamma(M)$ where the weights γ can be different for different singular points of the manifold.

Second, the establishing of the finiteness theorems can be carried out in the framework of the corresponding *operator algebra* by means of constructing a regularizer (almost inverse operator) for the operator $\hat{D}$ in question. In a neighborhood of any singular point this algebra can be constructed as an algebra of functions $\hat{F}(r, rd/dr)$, the symbols $\hat{F}(r,p)$ being functions with values in the algebra of pseudodifferential operators on the base Ω of the cone. The variable r is included for the consideration of equations with variable coefficients, and the construction of such an algebra requires the theory of functions of two (or more) noncommutative operators *(noncommutative analysis)*.

3. To conclude this subsection, we remark that all the above considerations can be carried out in the *cuspidal* case as well. To do this, one has to replace the Mellin transform (0.64) by the *Borel-Laplace* transform (see [25])

$$\tilde{u}(p,\varphi) = \mathcal{B}[u] = \int_0^\infty \exp\left\{\frac{p}{kr^k}\right\} u(r,\varphi)\frac{dr}{r^{k+1}},$$

and, hence, the corresponding operator algebra will consist of operators of the form $\hat{F}_\gamma\left(r, r^{1+k}\partial/\partial r\right)$ (we omit some technical details concerned with localization of these notions at the point $r = 0$; the complete theory will be presented in the main part of the book).

0.4 Conclusions

Here, we hall summarize the results of the above examples and to point out the main notions and tools which will be considered in the main part of the book.

First of all, the investigation of equations on manifolds with singularities can be divided into the following two steps:

- Investigation of solvability and uniqueness of solutions (more exactly, on this second step we establish the *finiteness theorems* for the equation in question).
- *Asymptotical* investigation of solutions to the considered equation.

Clearly, the two parts of investigation mentioned above are not independent. Namely, as it was shown in Subsection 0.3.1, the form of asymptotic solutions for the equation determines the choice of function spaces for the investigation of the Fredholm property of the corresponding operator. From the other hand, after the finiteness theorems are established, the question arises whether all solutions to the equation in the introduced function spaces really have *asymptotic expansions* obtained on the first stage of investigation. From here, it follows that the tools used for investigation on the first and second steps mentioned above must be compatible with each other.

1. Let us consider the *asymptotic* part of the theory. As it was shown in Section 0.2, the asymptotic expansions for different types of singularities of the underlying manifold are quite different (by the way, it is clear that the investigation of different type of singular poits of the underlying manifold requires an invariant definition of these types). From the other hand, the investigation methods have much in common for these different situations. In particular, for the complete investigation of behavior of solutions at singular points of the manifold one has to use the *resummation* of divergent power series (*resurgent analysis*), though formally the resummation methods for different types of singularities have different form. This leads to the nesessity of working out a *general scheme* of asymptotic investigation such that all particular types of singular points can be examined with the help of specializations of this general scheme. The latter must include the appropriate resummation methods as well as the tools for investigating such effects as the Stokes phenomenon nesessarily arising during the asymptotic investigation with the help of the resurgent analysis (see Section 0.2.3). All the considerations at this step are fulfilled with the help of

the corresponding resurgent transform (or, more generally, *resurgent representation*, see below), and we have to construct the abstract theory of such transforms which is general enough to include all transforms needed for all types of singularities of the manifold as its generalization.

We remark also that in the process of asymptotic investigation one shall meet the phenomenon of *ramification* of the obtained asymptotic expansions which is strongly connected with the Stokes phenomenon mentioned above.

2. Let us pass to the consideration of the *solvability* of differential equations in question. As it was shown on example from Subsection 0.3.2, this investigation can be naturally fulfilled in the framework of *operator algebras* with generators defined by the concrete type of singular point of the underlying manifold. The main tool for constructing such algebras is *Maslov's noncommutative analysis* with different types of commutation relations.

Once again, we see that on this step of investigation we meet with large variety of generators for different types of singular points of the manifold. Hence, we again come to the nesessity of constructing a *general scheme* including all this variety as specializations. Besides, as it was remarked above, the sceme of construction of operator algebras have to be compatible with the above mentioned scheme of asymptotic investigation. This means that, in essence, the operator algebras introduced on this step must be based on the modification of the resurgent representations introduced on the first step of investigation.

3. So, the presentation of the material in the book goes as follows.

The book has Introduction, Generalities, three parts and two Appendixes.

The first part includes the *resurgent backgrounds* of the theory. Here we present the exposition of the resurgent analysis. The aim of this part is to introduce the reader to the new asymptotical methods so to make the exposition of the theory of differential equations on manifolds with singularities self-contained. We concentrate here mainly on the basic ideas and notions, referring the reader to the corresponding monographs for technical details.

The second part of the book is devoted to the asymptotic theory. Here we suggest (new in the elliptic theory) approach based on the semi-classical methods. This part contains a general approach to the construction of resurgent solutions by semi-classical method, which are then detalized on concrete examples. We have chosen asymptotics near singular points of cuspidal type as example since (in contrast with conical singularities) this case requires application of resurgent analysis. Moreover, here we investigate also the so-called asymptotic catastrophes connected with the methamorphization of resurgent asymptotics for cuspidal singularities into conormal asymptotics for conical ones. One of the chapters (Chapter V) is devoted to

a very interesting question of interaction of asymptotic expansions in different singular points of the underlying manifold. In fact, as it is shown in this chapter, the knowledge of the asymptotics of a solution at one of singular points determines in fact the asymptotics of this solution at all other singular points of the manifold as well. Moreover, we present the algorithm of "translation" of asymptotic expansions from one singular point to another.

The third part of the book is devoted to finiteness theorems (Fredholm property) of elliptic operators both on manifolds with point-type singularities and on manifolds with edges. Establishing of the Fredholm property for these operators is performed in the framework of corresponding operator algebras which are constructed in the unified way, at least for all singularities of isolated type considered. Except for the proof of finite dimensionality of kernels and cokernels of the corresponding elliptic operators we obtain here, at last, *exact asymptotics of solutions* to corresponding equations. Here also the resurgent analysis and resurgent representations work. Later on, we construct the theory of deformation of the corresponding operator algebras. The expressing example of this theory is the proof of the coincidence of the index of an elliptic operator on manifolds with arbitrary (but topologically equivalent) type of singularities. For instance, the index of an elliptic operator on a manifold with cusp-type singularity coincides with that on (topologically equivalent) manifold with singularity of conical type.

In the beginning of the book we have put the Introduction and the chapter called Generalities. In the Introduction we have tried to show by simple examples the main ideas, that is, ideas of resurgent analysis, which form the analytic basis of methods presented in the book.

In Generalities, we describe the types of singularities we shall deal throughout the book. The convenient apparatus for this description, similar to algebraic geometry, is the language of ringed spaces. Namely, we describe a singularity in terms of the corresponding function ring and the structure ring of differential operators. This language being very adequate and convenient allows to stand the notion of singularity on the invariant and easily dealt with basis.

The book is concluded by two appendices. First contains the presentation of the so-called $\partial/\partial s$-transform which is an important technical tool of resurgent analysis, and which was successfully used in different problems of constructing semi-classical asymptotics. The detailed presentation of these and related questions the reader will find in books [24, 25] by B. Sternin and V. Shatalov.

The second appendix is devoted to the short presentation of the basics of non-commutative analysis which is the main technical tool in the proof of the finiteness theorem. The detailed presentation of questions touched in this Appendix the reader can find in the monographs [5, 9].

Bibliography

[1] Yu Egorov and B.-W. Schulze. *Pseudo-Differential Operators, Singularities, Applications.* Birkhäuser, Boston, Basel, Berlin, 1997.

[2] V. A. Kondrat'ev. Boundary problems for elliptic equations in domains with conical or angular points. *Trans. of Moscow Math. Soc.*, **16**, 1967, 287–313. English transl. from: *Trudy Mosk. Mat. Obshch.*. **15** (1966), pp. 400 – 451.

[3] L. D. Landau and E. M. Lifshitz. *Quantum Mechanics (Non-relativistic Theory)*, volume 3 of *Course of Theoretical Physics.* Pergamon Press, Oxford, U. K., third edition, 1977.

[4] V.P. Maslov. *Théorie des Perturbations et Méthods Asymptotiques.* Dunod, Paris, 1972. French transl. from the Russian 1965 edition.

[5] V.P. Maslov. *Operator Methods.* Nauka, Moscow, 1973. English transl.: *Operational Methods*, Mir, Moscow, 1976.

[6] V. Maz'ya, V. Kozlov, and J. Rossman. *Point Boundary Singularities in Elliptic Theory.* AMS, Providence, R.I., 1997. To appear.

[7] R. Melrose. *The Atiyah-Patodi-Singer Index Theorem.* Research Notes in Mathematics. A. K. Peters, Wellesley, Ma, 1993.

[8] A. Mishchenko, V. Shatalov, and B. Sternin. *Lagrangian Manifolds and the Maslov Operator.* Springer-Verlag, Berlin–Heidelberg, 1990.

[9] V. Nazaikinskii, B. Sternin, and V. Shatalov. *Methods of Noncommutative Analysis. Theory and Applications.* Mathematical Studies. Walter de Gruyter Publishers, Berlin–New York, 1995.

[10] B.A. Plamenevskij. *Algebras of Pseudodifferantial Operators.* Kluwer Academic Publishers, Dordrecht NL, 1989.

[11] B.-W. Schulze. *Pseudodifferential Operators on Manifolds with Singularities.* North-Holland, Amsterdam, 1991.

[12] B.-W. Schulze. *Pseudo-Differential Boundary Value Problems, Conical Singularities, and Asymptotics*, volume 4 of *Mathematics Topics.* Akademie Verlag, Berlin, 1994.

[13] B.-W. Schulze, B. Sternin, and V. Shatalov. On a solvability of differential equations on manifolds with singularities in classes of resurgent functions. To be published in Math. Nachrichten.

[14] B.-W. Schulze, B. Sternin, and V. Shatalov. Resurgent analysis and differential equations with singularities. In *Partial Differential Equations. Models in Physics and Biology*, volume 82 of *Mathematical Research*, 1994, pages 401 – 418, Berlin. Akademie Verlag. Proc. of Belgien-French Meeting in Han-sur-Lesse, 1993.

[15] B.-W. Schulze, B. Sternin, and V. Shatalov. Resurgent analysis in the theory of differential equations with singularities. *Matematische Nachrichten*, **170**, 1994, 1 – 21.

[16] B.-W. Schulze, B. Sternin, and V. Shatalov. *Differential Equations on Manifols with Singularities in Classes of Resurgent Functions.* Max-Planck-Institut für Mathematik, Bonn, 1995. Preprint MPI/95-88.

[17] B.-W. Schulze, B. Sternin, and V. Shatalov. *Asymptotic Solutions to Differential Equations on Manifolds with Cusps.* Max-Planck-Institut für Mathematik, Bonn, 1996. Preprint MPI/96-89.

[18] B.-W. Schulze, B. Sternin, and V. Shatalov. *An Operator Algebra on Manifolds with Cusp-Type Singularities.* Max-Planck Institut für Mathematik, Bonn, 1996. Preprint MPI 96-111.

[19] B.-W. Schulze, B. Sternin, and V. Shatalov. *Operator Algebras on Cuspidal Wedges.* Max-Planck Institut für Mathematik, Bonn, 1996. Preprint MPI 96-137.

[20] B.-W. Schulze, B. Sternin, and V. Shatalov. Structure Rings of Singularities and Differential Equations. In *Differential Equations, Asymptotic Analysis,*

and Mathematical Physics, number 100 in Mathematical Research, 1996, pages 325–347, Berlin. Akademie Verlag.

[21] B.-W. Schulze, B. Sternin, and V. Shatalov. *Operator Algebras Associated with Resurgent Transforms and Differential Equations on Manifolds with Singularities.* Université de Nice-Sophia Antipolis, Nice, 1997. Preprint N 481.

[22] B.-W. Schulze, B. Sternin, and V. Shatalov. *Oscillation of elastic shells with conical points.* Université de Nice-Sophia Antipolis, Nice, 1997. Preprint N 470.

[23] B.-W. Schulze, B. Sternin, and V. Shatalov. *Nonstationary Problems for Equations of Borel-Fuchs Type.* Univ. Potsdam, Institut für Mathematik, Potsdam, May 1997. Preprint N 97/11, To appear in Dokl. Russian Akad. Nauk.

[24] B. Sternin and V. Shatalov. *Differential Equations on Complex Manifolds.* Kluwer Academic Publishers, Dordrecht, 1994.

[25] B. Sternin and V. Shatalov. *Borel-Laplace Transform and Asymptotic Theory.* CRC-Press, Boca Raton, Florida, USA, 1996.

[26] B. Sternin and V. Shatalov. *Deformations of Resurgent Representations and Exact Asymptotics of Solutions to Differential Equations.* Max-Planck-Institut für Mathematik, Bonn, 1996. Preprint MPI 96-132.

Potsdam